xanik®

H.F. acid valves

H.F. acid valves

The information on this catalog is only for reference purposes, for detail information consult our sales department.

La información de este catalogo es solo para referencia. Para información detallada consulte a nuestro departamento de ventas.

xanor de méxico, s.a. de c.v.
phone: 52 55 5148 1021 - sales: 52 55 5148 1021, 52 55 5148 1022, email: sales@xanik.com.mx
www.xanik.com

H.F. acid valves

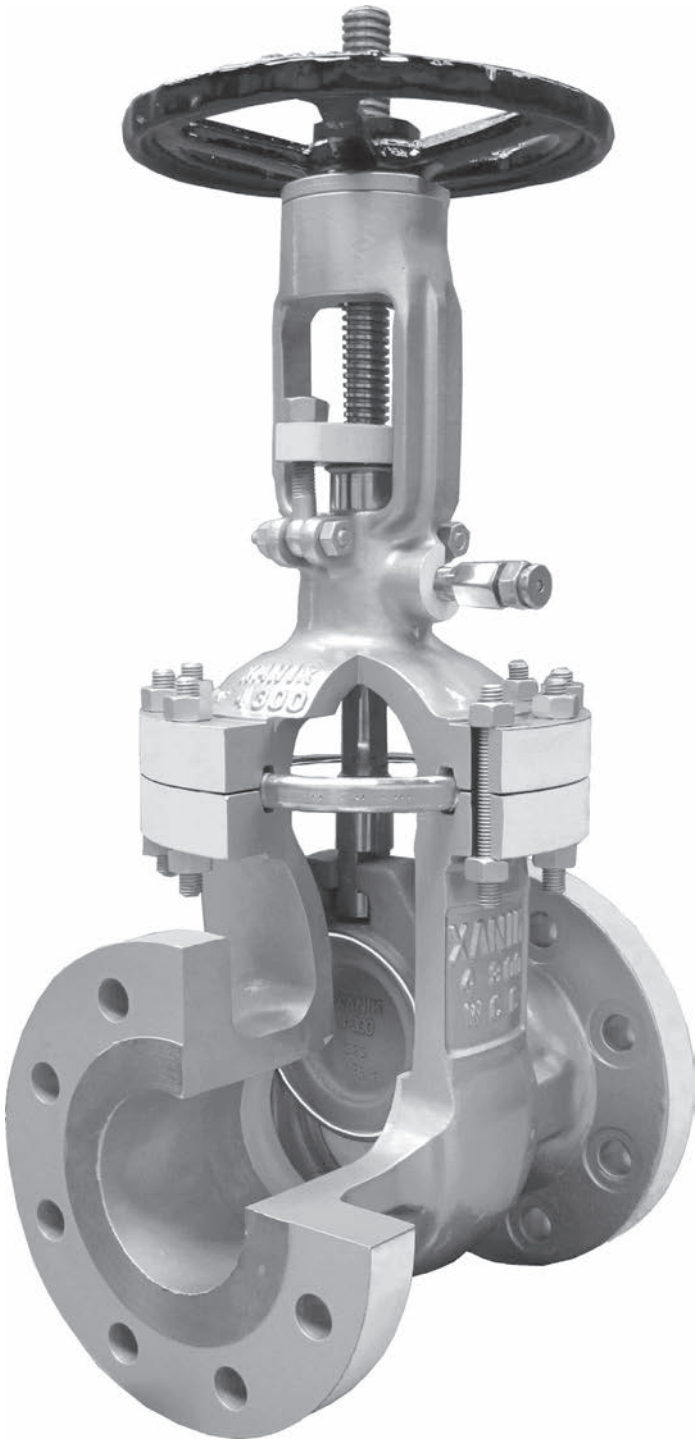

R-11-04

xanor de méxico, s.a. de c.v.
phone: +52 (55) 5148 1021, +52 (55) 5148 1022. email: sales@xanik.com.mx
www.xanik.com

H.F. valve index by subject

Valves following UOP recommendations index.	H - 3
Valves following Phillips recommendations index.	H - 4
Manufacturing experience and quality assurance.	H - 5 - H - 6
API 600 gate with High Performance Seats.	H - 7
H.F acid valve grease injector.	H - 8
H.F acid valve application guide.	H - 9
Valve product line following UOP recommendations.	H - 10 - H - 36
Valve product line following Phillips recommendations .	H - 37 - H - 60

The information on this catalog is only for reference purposes, for detail information consult our sales department.

La información de este catalogo es solo para referencia. Para información detallada consulte a nuestro departamento de ventas.

H.F. acid valves index

Valves following UOP recommendations index.

Gate Valves:

Class 300 Carbon steel 1/2" - 1" API 602, flanged ends	fig: GH03R-U-YC fig: GH03R-U-YC-TR fig: GH03R-U	basic valve w/grease injector w/grease injector & high performance seats without grease injector	H - 10
Class 300 Monel 1/2" - 1" API 602, flanged ends	fig: GH03R-M35-U fig: GH03R-M35-U-TR fig: GH03R-M35-U-YC	basic valve (without grease injector) basic valve w/high performance seats w/grease injector option only	H - 11
Class 600 Carbon steel 1/2" - 1" API 602, flanged ends	fig: GH06R-U-RJ-YC-TR	w/grease injector & high performance seats	H - 12
Class 600 Monel 1/2" - 1" API 602, flanged ends	fig: GH06R-M35-U-RJ-YC	w/grease injector	H - 13
Class 800 Carbon steel 1/2" - 1.5" API 602, socket weld ends	fig: GH08W-U-RJ-YC-TR fig: GH08W-U	w/grease injector & high performance seats without grease injector	H - 14
Class 800 Monel 1/2" - 1.5" API 602, socket weld ends	fig: GH08W-M35-U-RJ-YC-TR fig: GH08W-M35-RJ-U	w/highperformance seats and grease injector metal seats.	H - 15
Class 150 Carbon steel 1 1/2" - 36" API 600, flanged ends	fig: GH01R-U	basic valve (without grease injector)	H - 28
Class 300 Carbon steel 1 1/2" - 36 API 600, flanged ends	fig: GH03R-U-YC-RJ-TD	w/RTJ bonnet gasket, gr. injector & high perf. seats	H - 29
Class 300 Monel 1 1/2" - 12" API 600, flanged ends	fig: GH03R-M35-U-RJ-YC-YB	w/grease injector on seats and packing chamber	H - 30

Globe Valves:

Class 300 Carbon steel 1/2" - 1" API 602 type, flanged ends	fig: BH03R-U-YC fig: BH03R-U-YC-TD fig: BH03R-U	basic valve w/grease injector w/grease injector & high performance seats without grease injector	H - 16
Class 600 Carbon steel 1/2" - 1" API 602 type, flanged ends	fig: BH03R-U-YC-TD	w/high performance seats and grease injector	H - 17
Class 600 Carbon steel 1/2" - 1" API 602 type, flanged ends	fig: BH06R-U-RJ-YC-YB	w/grease injector on seat & packing chamber	H - 18
Class 600 Monel 1/2" - 1" API 602 type, flanged ends	fig: BH06R-M35-RJ-YC-YB	w/grease injector on seat & packing chamber	H - 19
Class 800 Carbon steel 1/2" - 1.5" API 602 type, socket weld ends	fig: BH08W-U-RJ-YC-YB fig: BH08W-U	w/PTFE insert & grease injector onpacking chamber without grease injector	H - 20
Class 800 Carbon steel 1/2" - 1.5" API 602 type, socket weld ends	fig: BH08W-U-RJ-YC-YB	w/grease injector on seat & packing chamber	H - 21
Class 150 Carbon steel 1 1/2" - 6" Class 300 Carbon steel 1 1/2" - 6" API 600 type, flanged ends	fig: BH01R-U fig: BH03R-U	basic valve (without grease injector)	H - 31
Class 300 Carbon steel 1 1/2" - 12" API 600 type, flanged ends	fig: BH03R-U-RJ-YC-TD fig: BH03R-U-RJ-YC-YB	w/RTJ bonnet gasket, gr. injector & high perf. seats w/grease injector on seat & packing chamber	H - 32
Class 300 Monel 1 1/2" - 12" API 600 type, flanged ends	fig: BH03R-M35-U-RJ-YC-YB	w/grease injector on seat & packing chamber	H - 33

Check Valves:

Class 300 Carbon steel 1/2" - 1" API 602 type, flanged ends	fig: LH03R-U	lift type, spiral wound gasket	H - 22
Class 300 Monel 1/2" - 1" API 602 type, flanged ends	fig: LH03R-M35-U	lift type, spiral wound gasket	H - 23
Class 600 Carbon steel 1/2" - 1" API 602 type, flanged ends	fig: LH06R-U	lift type, spiral wound gasket	H - 24
Class 600 Monel 1/2" - 1" API 602 type, flanged ends	fig: LH06R-M35-U-RJ	lift type, RTJ Cap gasket	H - 25
Class 800 Carbon steel 1/2" - 1" API 602 type, sw ends	fig: LH08W-U-RJ	lift type, RTJ Cap gasket	H - 26
Class 800 Carbon steel 1/2" - 1.5" API 602 type, sw ends	fig: LH08W-U	lift type, spiral wound gasket	H - 27
Class 150 Carbon steel 1 1/2" - 30" API 600 type, flanged ends	fig: WH01R-U	swing type, spiral wound gasket	H - 34
Class 300 Carbon steel 1 1/2" - 30" API 600 type, flanged ends	fig: WH03R-U-RJ	swing type, RTJ bonnet gasket	H - 35
Class 300 Monel 1 1/2" - 12" API 600 type, flanged ends	fig: WH03R-M35-U-RJ	swing type, RTJ bonnet gasket	H - 36

H.F. acid valve index

Valves following Phillips recommendations index.

Gate Valves:

Class 300 Carbon steel 1/2" - 1" API 602, flanged ends	fig: GH03R-P fig: GH03R-P-TR	basic valve w/high performance seats	H - 37
Class 300 Monel 1/2" - 1" API 602, flanged ends	fig: GH03R-M35-P fig: GH03R-M35-P-TR	basic valve w/high performance seats	H - 38
Class 600 Carbon steel 1/2" - 2" API 602, flanged ends	fig: GH06R-P fig: GH06R-P-TR	basic valve w/grease injectorw/high performance seats	H - 39
Class 600 Monel 1/2" - 2" API 602, flanged ends	fig: GH06R-M35-P fig: GH06R-M35-P-TR	basic valve w/high performance seats	H - 40
Class 800 Carbon steel 1/2" - 2" API 602, threaded ends	fig: GH08T-P fig: GH08T-P-TR	basic valve w/high performance seats	H - 41
Class 800 Monel 1/2" - 2" API 602, theaded ends	fig: GH08T-M35-P fig: GH08T-M35-P-TR	basic valve w/high performance seats	H - 42
Class 300 Carbon steel 1 1/2" - 36 API 600, flanged ends	fig: GH03R-P fig: GH03R-P-TD	basic valve w/high performance seats	H - 55
Class 300 Monel 1 1/2" - 12" API 600, flanged ends	fig: GH03R-M35-P fig: GH03R-M35-P-TD	basic valve w/high performance seats	H - 56

Globe Valves:

Class 300 Carbon steel 1/2" - 1" API 602 type, flanged ends	fig: BH03R-P fig: BH03R-P-TD	basic valve w/high performance seats	H - 43
Class 300 Monel 1/2" - 1" API 602 type, flanged ends	fig: BH03R-M35-P fig: BH03R-M35-P-TD	basic valve w/high performance seats	H - 44
Class 600 Carbon steel 1/2" - 2" API 602 type, flanged ends	fig: BH06R-P fig: BH06R-P-TD	basic valve w/high performance seats	H - 45
Class 600 Monel 1/2" - 2" API 602 type, flanged ends	fig: BH06R-M35-P fig: BH06R-M35-PTD	basic valve w/high performance seats	H - 46
Class 800 Carbon steel 1/2" - 2" API 602 type, threaded ends	fig: BH08T-P fig: BH08T-P-TD	basic valve w/high performance seats	H - 47
Class 800 Monel 1/2" - 2" API 602 type, threaded ends	fig: BH08T-M35-P fig: BH08T-M35-P-TD	basic valve w/high performance seats	H - 48
Class 300 Carbon steel 1 1/2" - 12" API 600 type, flanged ends	fig: BH03R-P fig: BH03R-P-TD	basic valve w/high performance seats	H - 57
Class 300 Monel 1 1/2" - 12" API 600 type, flanged ends	fig: BH03R-M35-P fig: BH03R-M35-P-TD	basic valve w/high performance seats	H - 58

Check Valves:

Class 300 Carbon steel 1/2" - 1" API 602 type, flanged ends	fig: LH03R-P	lift type	H - 49
Class 300 Monel 1/2" - 1" API 602 type, flanged ends	fig: LH03R-M35-P	lift type	H - 50
Class 600 Carbon steel 1/2" - 1" API 602 type, flanged ends	fig: LH06R-P	lift type	H - 51
Class 600 Monel 1/2" - 1" API 602 type, flanged ends	fig: LH06R-M35-P	lift type	H - 52
Class 800 Carbon steel 1/2" - 2" API 602 type, threaded ends	fig: LH08T-P	lift type	H - 53
Class 800 Monel 1/2" - 2" API 602 type, threaded ends	fig: LH08T-M35-P	lift type	H - 54
Class 300 Carbon steel 1 1/2" - 30" API 600 type, flanged ends	fig: WH03R-P	swing type	H - 59
Class 300 Monel 1 1/2" - 12" API 600 type, flanged ends	fig: WH03R-M35-P	swing type	H - 60

H.F. acid valves manufacturing experience and quality assurance

H.F. Valve Manufacturing Experience

Xanik® has been supplying H.F. valves (gate, globe and check) for the past 12 years for critical service in alkylation plants.

Operation and maintenance concerns of alkylation plant technicians, maintaining close contact with them, has helped in our efforts to design first class H.F. Valves for the industry.

H.F. Quality Castings

Quality castings are mandatory for H.F. acid alkylation service.

Each prototype (first) casting is radiographic examined to an acceptance level 2. If a foundry process is modified, the next castings produced are radiographic examined.

Regular production runs are random sampled radiographed to assure the quality of the castings.

The monel casting used in alkylation applications are made of a modified alloy ASTM A 494-M35-1, with more restricted allowances of impurities to obtain a weldable monel, for increasing its corrosion resistance and secure the internal sanity required in alkylation processes.

Full Double Seal Welded Seat Rings

Another important aspect in the manufacture of H.F valves is the elimination of threaded areas in which fluoride is formed.

We have developed a welding method to install solid monel seats into the valve body. double seal welding of the seats is superior to conventional thread in designs.

Shell Helium Test

Helium gas medium is used to test our H.F. Valves. This medium has proven to be more efective than standard hydrostatic tests.

H.F. Valves are tested at 500 psig for 100% assurance of zero throug wall leakage.

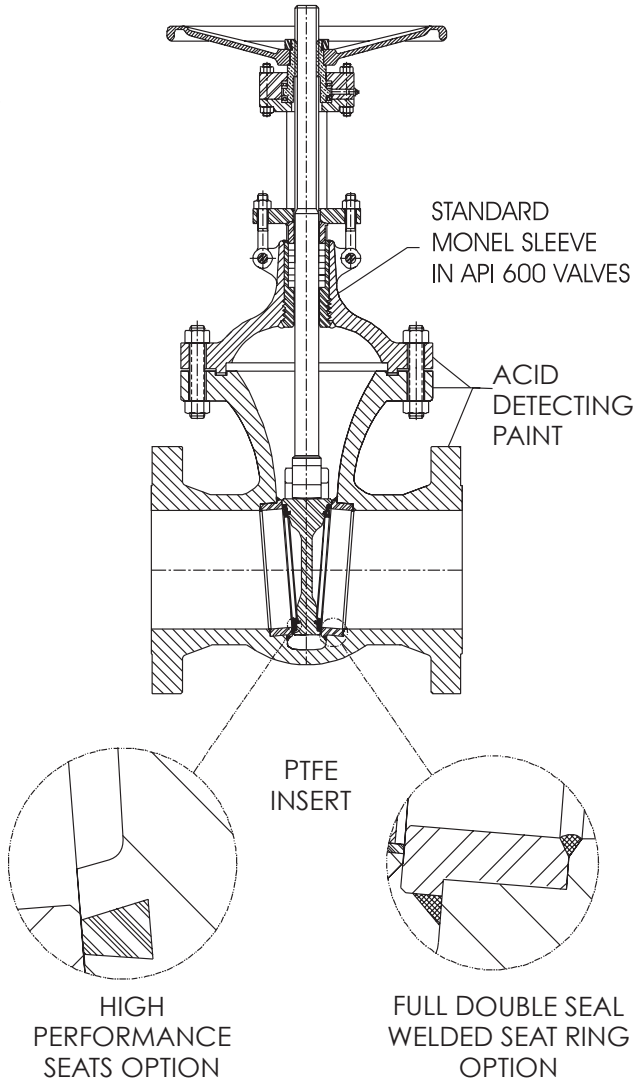

xanor de méxico, s.a. de c.v.
phone: +52 (55) 5148 1021, +52 (55) 5148 1022. email: sales@xanik.com.mx
www.xanik.com

Hydrostatic Shell Test And Seat Test

Each valve is subjected to hydrostatic shell test at a pressure not less than 1.5 times the 100°F rating as defined in ANSI/ASME B16.34 and also every valve is high pressure closure tested at a pressure not less than 1.1 times the 100°F rating.

When water is used as a testing medium entrapment of moisture can act as a corrosion accelerator. to avoid this potential problem **Xanik®** utilizes paraffinic oil as a testing medium.

The valves are 100% tested following the acceptance criteria of API 598. to further assure the quality of the valve performance.We can test the valves with other client acceptance criteria.

Low Pressure Closure Test

Each valve is subjected to a low pressures closure. Test of 80 to 100 psig, following the acceptance criteria of API 598, or other client requirement.

Extended Test Time Periods

Xanik® H.F. valves are hydrotested beyond the time periods as specified according to api 598 to insure quality of the valves.

Certified Quality

All machining operations, welding, assembly and testing are conducted according to our quality assurance program.

Our quality control departament verifies that all documentation, traceability and testing requirements are recorded. Any special client specifications are included in these records. **Xanik®** manufactures it's products according to ISO 9001 as a part of maintaining quality standards.

API 600 gate with High Performance Seats

A tight shut off is required when pumps or critical equipment is to be isolated for maintenance / service. **Xanik®** metal to metal secondary seals provide a fire safe seal both upstream and downstream.

The high performance seats option provide a bubble tight shut off using a PTFE pressure energized primary seal.

The mechanical retention of the resilient seal utilizing a shaped retainer and monel fasteners meet the most difficult operating conditions and provide ease of maintenance / service when required.

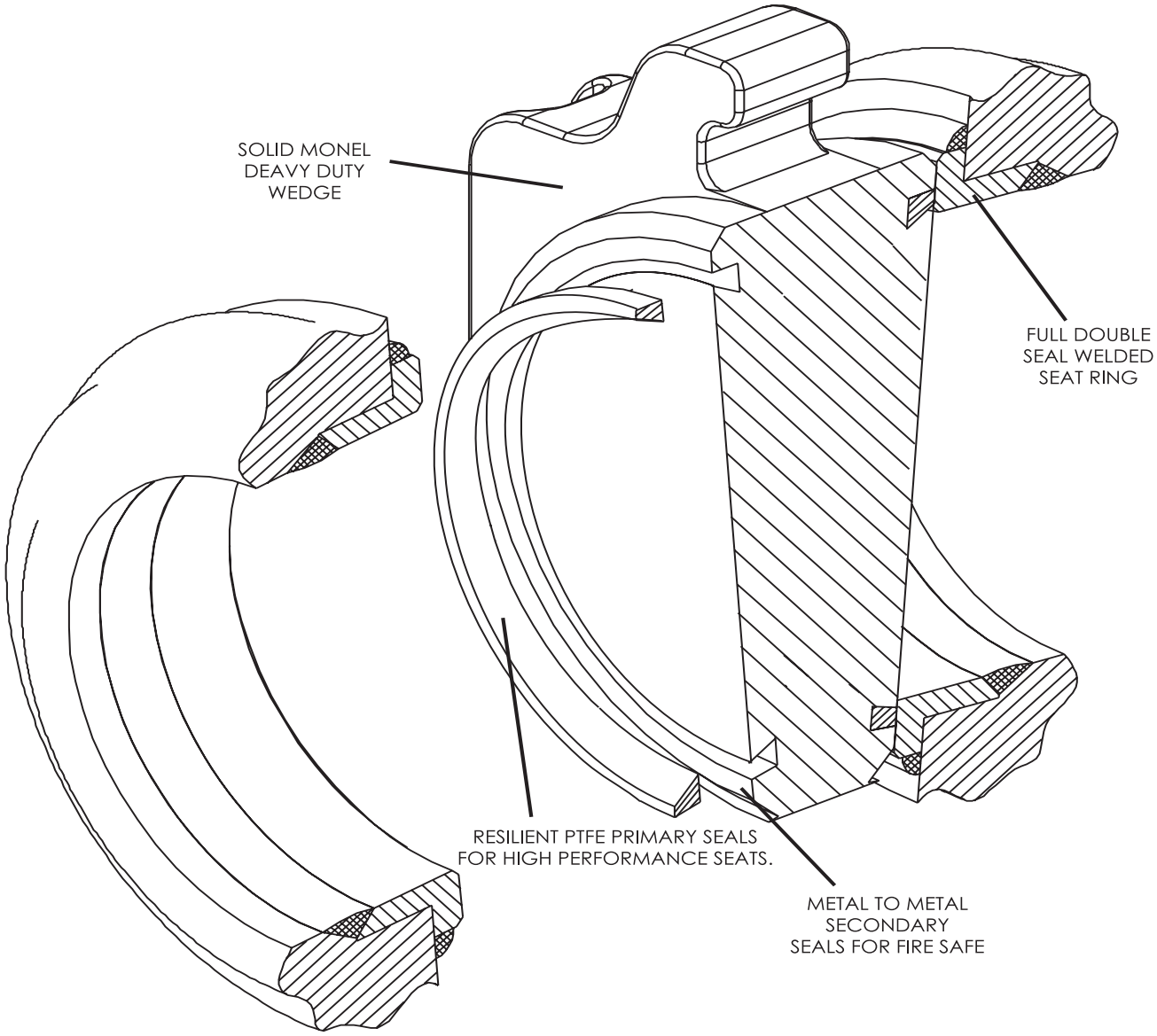

H.F. acid valve grease injector

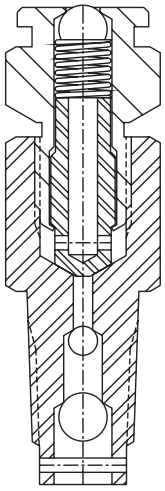

DOUBLE BALL CHECK GREASE INJECTOR

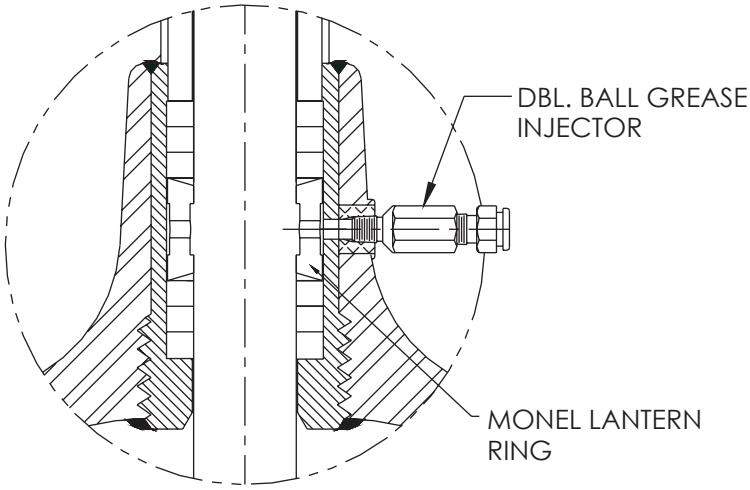

GREASE INJECTOR OPTIONAL

Xanik® H.F. Valves with deep stuffing boxes can be equipped with a grease injector fitting into the packing chamber upon customer request. This feature allows for injection of lubricant to seal around the stem, extending packing life and reducing operating torque.

Xanik® grease injector has a double ball check and a positive closing internal valve. It requires less than a full turn of the injector head to open the internal valve for lubricant injection. After lubricant injection is completed the injector head is tightened to obtain positive internal shut off.

Gate valves.

Gate valves are designed to close off or open up the flow in a pipeline. Gate valves are not recommended for throttling use.

Gate valves are commonly installed in horizontal pipe runs with the stem in a vertical position. They can be installed in a position where the stem is not vertical. However, valve size, pressure rating, flow media and service conditions should be a consideration prior to designing a piping system and attempting to utilize a gate valve other than with the stem in a vertical position.

For pump isolation services that require bubble tight shutoff, the High performance seats (HPS) design is the best choice. This fire safe design with a PTFE seal provides a zero leakage barrier on upstream and down stream seats.

Globes valves.

Globe valves are designed to close off, open up or throttle the flow in a pipeline. The disc is designed to completely stop flow and form a tight seal with pressure under the disc.

Continuous throttling at less than 10% open may cause cavitation, noise, and wear and discs and seats destruction. While not designed as control valves and not recommended for continuous modulation, globe valves are often used successfully for manual or automatic control during limited periods of system operation (start-up, shutdown, etc.). Continuous severe throttling applications may require a control valve.

Globe valves can also be used with over-seat flow and pressure ("flow to close"), but such applications require careful consideration. In systems with dirty line fluids, this arrangement could lead to trapping foreign material in locations where it would interfere with opening. With over-seat pressure, the effort to close the valve is low, because closure and sealing are pressure-assisted.

Check valves.

Swing check valves are designed to open by the system pressure in a line, and any attempt by the flow to reverse will close the valve completely. Check valves allow flow in one direction only.

Correct sizing of swing check valves is required, because too low or too high velocity can cause disc vibrations and damage valve internals. Applications involving severely unstable flow like rapid and frequent flow reversals or pulsating flow should be avoided. Relocating swing check valves within the piping system can often minimize or eliminate problems. **Xanik®** will be glad to advise you on your application.

Lift check valves are opened by the flow of system pressure in one direction and close automatically when the system flows in the opposite direction.

Lift check valves have lower flow coefficients and produce pressure drops comparable to globe valves. They are sometimes preferred in systems where pressure drop is not critical. Lift check valves are generally the most practical types for small sizes, and they generally provide the best seat tightness. Lift check valves should be used in horizontal pipes.

H.F. acid gate valves

fig: GH03R-U-YC -basic valve w/grease injector
fig: GH03R-U-YC-TR -w/grease injector & high performance seats
fig: GH03R-U -without grease injector

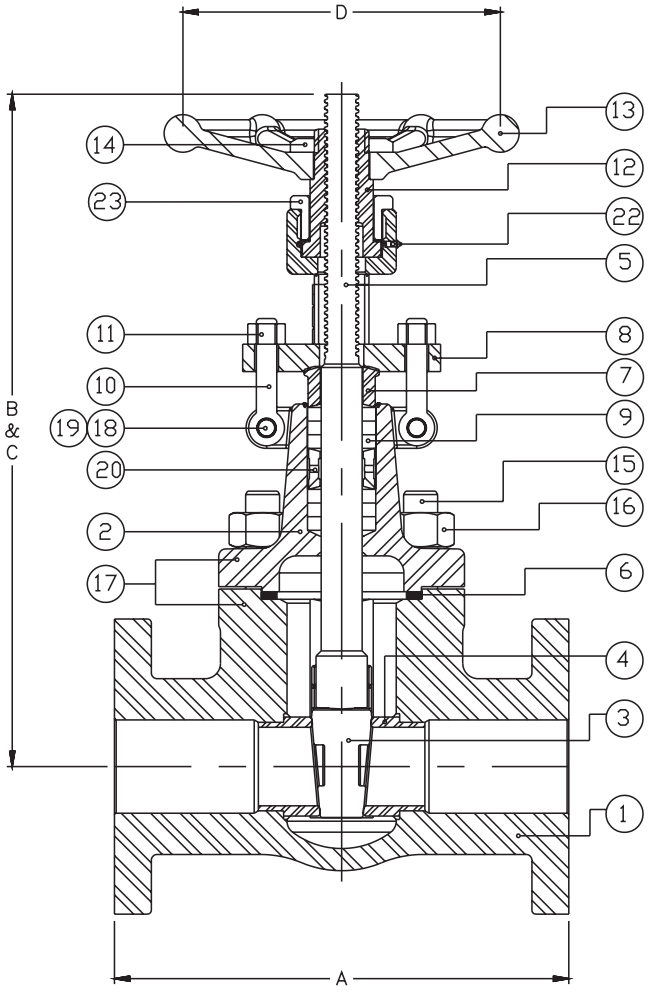

No	Description	Material Specifications
1	BODY	ASTM A-105 (1)
2	BONNET	ASTM A-105 (1)
3	WEDGE	MONEL (UNS N04400)
4	SEAT RING	MONEL (UNS N04400)
5	STEM	K 500 (ASTM B-865 - UNS N05500)
6	BONNET GASKET SPIRAL WOUND	MONEL UNS N04400 GRAPHOIL FILLED
7	PACKING GLAND	ASTM B-164 - UNS N04400
8	GLAND FLANGE	ASTM A-515 GR.70 or ASTM A-105
9	PACKING	JOHN CRANE 237 (GRAPHOIL)
10	EYE BOLT	ASTM A-193 GR B7M
11	EYE BOLT NUT	ASTM A-194 GR.2HM
12	YOKE NUT	ALLUMINUM BRONZE
13	HANDWHEEL	ASTM A-536 GR.65-45-12
14	HANDWHEEL NUT	ASTM A-515 GR.70
15	BONNET STUD	ASTM A-193 GR.B7M
16	BONNET NUT	ASTM A-194 GR.2HM
17	FLANGE DETECTING PAINT	H.F. ACID DETECTING PAINT
18	STUD	ASTM A-193 GR B7M
19	NUT	ASTM A-194 GR 2HM
20	LANTERN RING	MONEL (UNS N04400)
21	DOUBLE BALL GREASE FITTING	CARBON STEEL
22	GREASE FITTING	CARBON STEEL
23	JAM NUT	CARBON STEEL

(1) Carbon content 0.25% max.

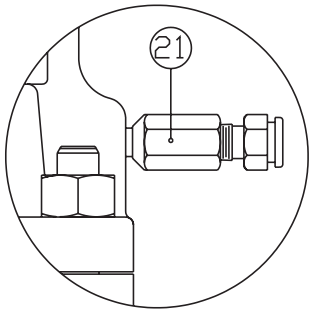

Included in
fig: GH03R-U-YC
fig: GH03R-U-YC-TR

dim	Description		1/2	3/4	1
A	FACE TO FACE FLANGED	in	5.5	6.0	6.5
		mm	140	152	165
B	CENTER TO TOP CLOSED	in	9	9	9
		mm	229	229	229
C	CENTER TO TOP OPEN	in	10	10	10
		mm	254	254	254
D	HANDWHEEL	plg	4	4.25	4.25
		mm	102	108	108
	WEIGHT	lbs	12	17	22
		kg	5.4	7.7	10

fig: GH03R-M35-U -basic valve (without grease injector)
fig: GH03R-M35-U-TR -basic valve w/high performance seats
fig: GH03R-M35-U-YC -w/grease injector option only

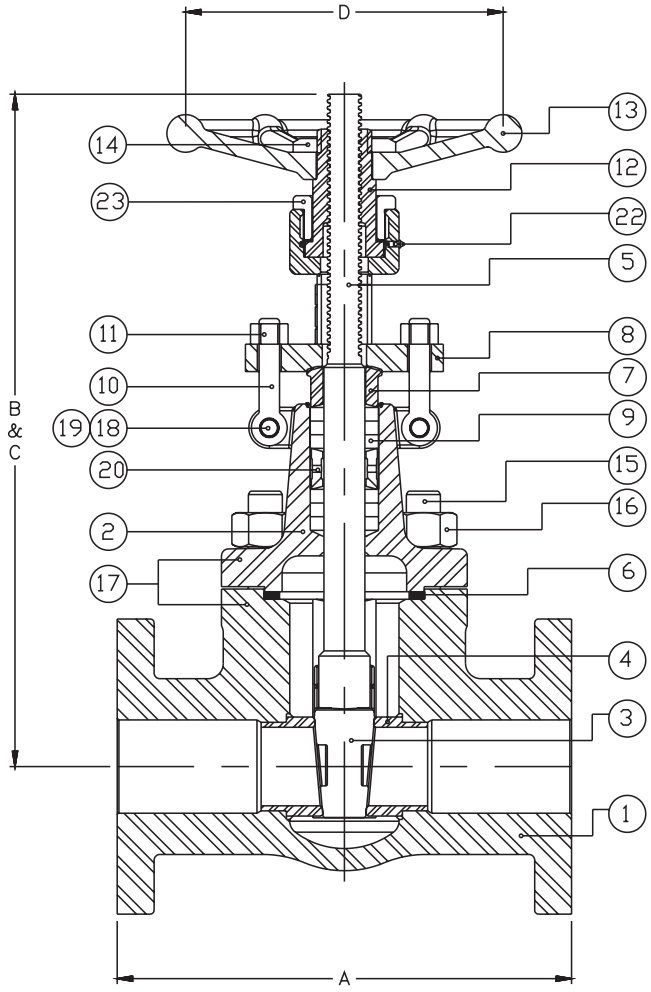

No	Description	Material Specifications
1	BODY	ASTM A-494 GR.M35-1 (UNS N04400)
2	BONNET	ASTM A-494 GR.M35-1 (UNS N04400)
3	WEDGE	MONEL (UNS N04400)
4	SEAT RING	MONEL (UNS N04400)
5	STEM	K500 (ASTM B-865 - UNS N05500)
6	BONNET GASKET SPIRAL WOUND	MONEL UNS N04400 GRAPHOIL FILLED
7	PACKING GLAND	ASTM B-164 - UNS N04400
8	GLAND FLANGE	ASTM A-515 GR.70 or ASTM A-105
9	PACKING	JOHN CRANE 237 (GRAPHOIL)
10	EYE BOLT	ASTM A-193 GR B7M
11	EYE BOLT NUT	ASTM A-194 GR.2HM
12	YOKE NUT	ALLUMINUM BRONZE
13	HANDWHEEL	ASTM A-536 GR.65-45-12
14	HANDWHEEL NUT	ASTM A-515 GR.70
15	BONNET STUD	ASTM A-193 GR.B7M
16	BONNET NUT	ASTM A-194 GR.2HM
17	FLANGE DETECTING PAINT	H.F. ACID DETECTING PAINT
18	STUD	ASTM A-193 GR B7M
19	NUT	ASTM A-194 GR 2HM
20	LANTERN RING	MONEL (UNS N04400) *
21	DOUBLE BALL GREASE FITTING	MONEL (UNS N04400) *
22	GREASE FITTING	CARBON STEEL
23	JAM NUT	CARBON STEEL

(*) Optional.

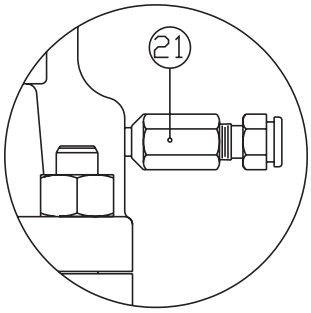

* Optional in
fig: GH03R-M35-U-YC

dim	Description		1/2	3/4	1
A	FACE TO FACE FLANGED	in	5.5	6.0	6.5
		mm	140	152	165
B	CENTER TO TOP CLOSED	in	9	9	9
		mm	229	229	229
C	CENTER TO TOP OPEN	in	10	10	10
		mm	254	254	254
D	HANDWHEEL	plg	4	4.25	4.25
		mm	102	108	108
	WEIGHT	lbs	12	17	22
		kg	5.4	7.7	10

H.F. acid gate valves

fig: GH06R -U - RJ - YC - TR
Flanged Ends, RTJ Gaset, Grease Injector in
Packing Chamber, Teflon insert on Seat Rings (HF-2 & HF-20)

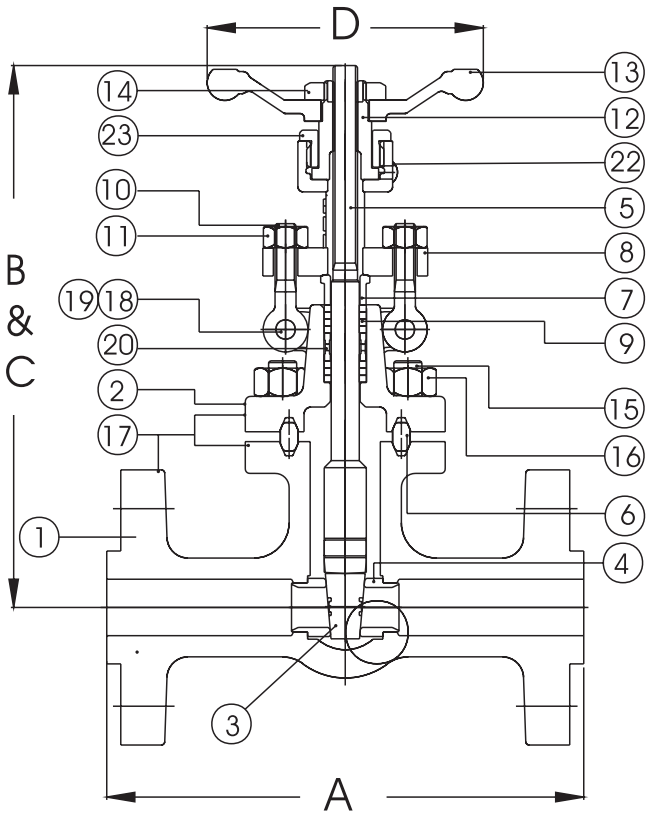

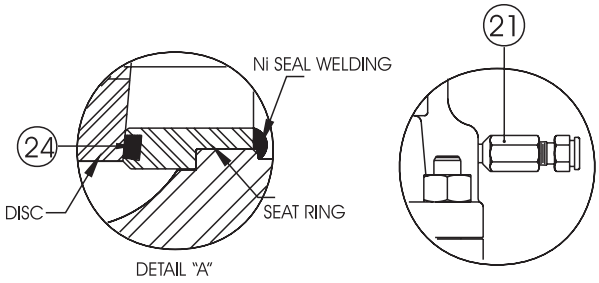

No	Description	Material Specifications
1	BODY	ASTM A-105 OR ASTM A-216-WCB (1)
2	BONNET	ASTM A-105 OR ASTM A-216-WCB (1)
3	WEDGE	MONEL (UNS N04400)
4	SEAT RING	MONEL (UNS N04400)
5	STEM	K500 (ASTM B-865 - UNS N0550)
6	BONNET GASKET RTJ	SOFT STEEL
7	PACKING GLAND	ASTM B-164 - UNS N04400
8	GLAND FLANGE	ASTM A-515 GR.70 OR ASTM A-105
9	PACKING	GRAPHITE (95%CARBON) WITH BRAIDED ANTI-EXTRUSION RINGS
10	EYE BOLT	ASTM A-193 GR B7M
11	EYE BOLT NUT	ASTM A-194 GR.2HM
12	YOKE NUT	ALLUMINUM BRONZE
13	HANDWHEEL	ASTM A-536 GR.65-45-12 (2)
14	HANDWHEEL NUT	ASTM A-515 GR.70
15	BONNET STUD	ASTM A-193 GR.B7M
16	BONNET NUT	ASTM A-194 GR.2HM
17	FLANGE DETECTING PAINT	H.F. ACID DETECTING PAINT
18	STUD	ALLOY 500
19	NUT	ALLOY 400
20	LANTERN RING	MONEL (UNS N04400)
21	DOUBLE BALL GREASE FITTING	CARBON STEEL W / MONEL SPRING, BALLS & NEEDLE
22	GREASE FITTING	CARBON STEEL
23	JAM NUT	CARBON STEEL
24	INSERT	PTFE

(1) Composition limits per UOP Spec. 801-440
(2) Optional Cast Steel Handwheel

dim	Description		1/2	3/4	1
A	FACE TO FACE FLANGED	in	6.5	7.5	8.5
		mm	165	191	216
B	CENTER TO TOP CLOSED	in	9.75	9.75	9.75
		mm	248	248	248
C	CENTER TO TOP OPEN	in	10.5	10.5	10.62
		mm	267	267	270
D	HANDWHEEL	plg	4.92	4.92	4.92
		mm	125	125	125
	WEIGHT	lbs	13	18	24
		kg	5.9	8.2	10.9

fig: GH06R-M35-U - RJ - YC
Flanged Ends, All Monel valve RTJ Gaset, Grease Injector in Packing Chamber (HF-1 & HF-10)

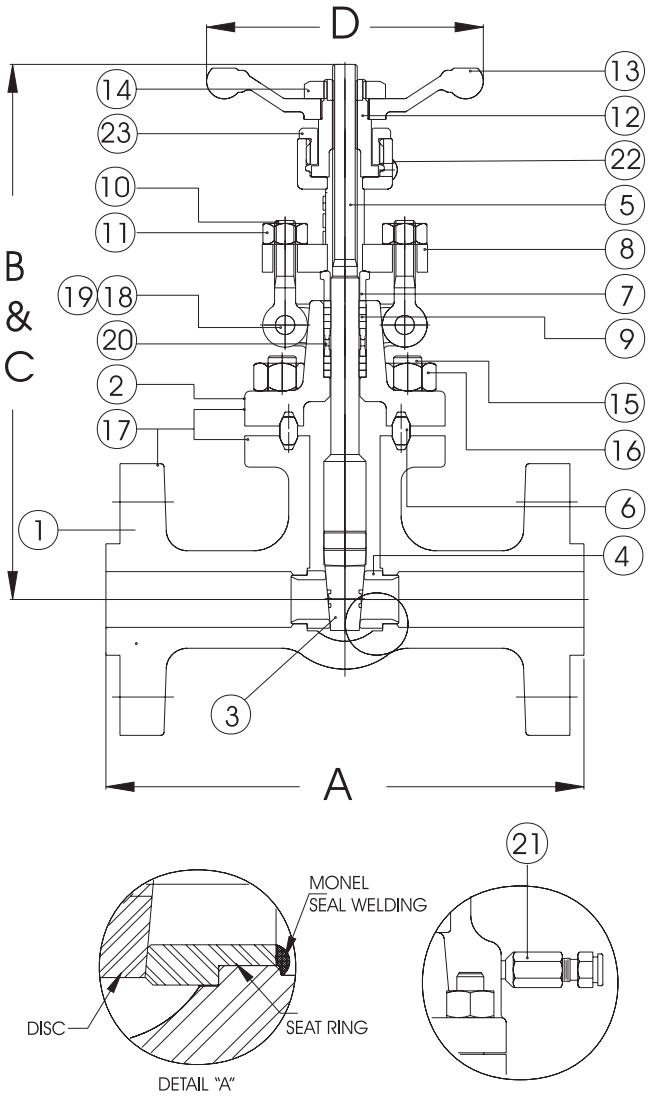

No	Description	Material Specifications
1	BODY	ASTM A-494 GR.M35-1 (1)
2	BONNET	ASTM A-494 GR.M35-1 (1)
3	WEDGE	MONEL (UNS N04400)
4	SEAT RING	MONEL (UNS N04400)
5	STEM	K 500 (ASTM B-865 - UNS N05500)
6	BONNET GASKET RTJ	MONEL UNS N04400
7	PACKING GLAND	ASTM B-164 - UNS N04400
8	GLAND FLANGE	ASTM A-515 GR.70 or ASTM A-105
9	PACKING	GRAPHITE (95%CARBON) WITH BRAIDED ANTI-EXTRUSION RINGS
10	EYE BOLT	ASTM A-193 GR B7M
11	EYE BOLT NUT	ASTM A-194 GR.2HM
12	YOKE NUT	ALLUMINUM BRONZE
13	HANDWHEEL	ASTM A-536 GR.65-45-12 (2)
14	HANDWHEEL NUT	ASTM A-515 GR.70
15	BONNET STUD	ASTM A-193 GR.B7M
16	BONNET NUT	ASTM A-194 GR.2HM
17	FLANGE DETECTING PAINT	H.F. ACID DETECTING PAINT
18	STUD	ALLOY 500
19	NUT	ALLOY 400
20	LANTERN RING	MONEL (UNS N04400)
21	DOUBLE BALL GREASE FITTING	MONEL (UNS N04400)
22	GREASE FITTING	CARBON STEEL
23	JAM NUT	CARBON STEEL

(1) Material with UOP requirements from spec. 801-440
(2) Optional Carbon Steel Handwheel.

dim	Description		1/2	3/4	1
A	FACE TO FACE FLANGED	in	6.5	7.5	8.5
		mm	165	191	216
B	CENTER TO TOP CLOSED	in	9.75	9.75	9.75
		mm	248	248	248
C	CENTER TO TOP OPEN	in	10.5	10.5	10.62
		mm	267	267	270
D	HANDWHEEL	plg	4.92	4.92	4.92
		mm	125	125	125
	WEIGHT	lbs	13	18	24
		kg	5.9	8.2	10.9

H.F. acid gate valves

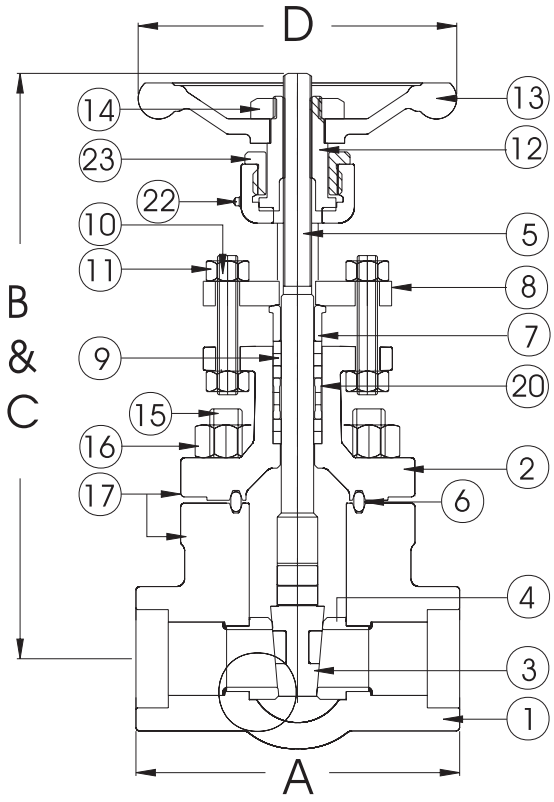

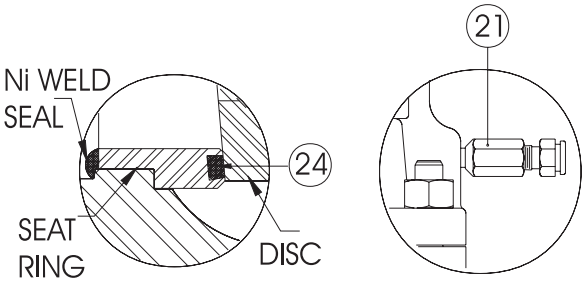

fig: GH08W-U-RJ- YC-TR - Ring joint gasket, grease injector on packing chamber and PTFE insert. (HF-2 & HF-20)

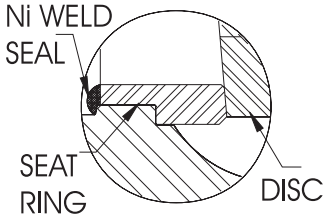

fig: GH08W-U -without grease injector, metal seats HF-4, HF-5, HF- 40, HF-50.

No	Description	Material Specifications
1	BODY	ASTM A126 - WCB OR ASTM A-105 (1)
2	BONNET	ASTM A126 - WCB OR ASTM A-105 (1)
3	WEDGE	MONEL (UNS N04400)
4	SEAT RING	MONEL (UNS N04400)
5	STEM	K500 (ASTM B-865 - UNS N05500)
6	BONNET GASKET METAL RING JOINT (HF-2 & HF-20)	SOFT STEEL (2)
7	PACKING GLAND	ASTM B-164 - UNS N04400
8	GLAND FLANGE	ASTM A-515 GR.70 or ASTM A-105
9	PACKING	GRAPHITE -95%CARBON INNER RINGS-BRIDED RINGS UPPER & LOWER
10	GLAND BOLT	ASTM A-193 GR B7M
11	GLAND BOLT NUT	ASTM A-194 GR.2HM
12	YOKE NUT	ALLUMINUM BRONZE
13	HANDWHEEL	ASTM A-536 GR.65-45-12 (3)
14	HANDWHEEL NUT	ASTM A-515 GR.70
15	BONNET STUD	ASTM A-193 GR.B7M
16	BONNET NUT	ASTM A-194 GR.2HM
17	FLANGE DETECTING PAINT	H.F. ACID DETECTING PAINT
20	LANTERN RING	MONEL (UNS N04400)
21	DOUBLE BALL GREASE FITTING	CARBON STEEL W / MONEL SPRING, BALLS & NEEDLE
22	GREASE FITTING	CARBON STEEL
23	JAM NUT	CARBON STEEL
24	INSERT	PTFE

(1) Composition limits per UOP Spec. 801-440
(2) For GH08W-U (HF-4, HF-5, HF-40 & HF-50) Monel/Graphite Spiral Wound Gasket
(3) Optional Cast Steel Handwheel

dim	Description		1/2	3/4	1	1.5
A	END TO END	in	3.70	4.34	5.00	7.00
		mm	94	110	127	178
B	CENTER TO TOP CLOSED	in	7.25	8.25	8.90	12.38
		mm	185	210	226	314
C	CENTER TO TOP OPEN	in	8.25	9.25	10.00	14.12
		mm	210	235	254	359
D	HANDWHEEL	plg	4.92	4.92	4.92	6.50
		mm	125	125	125	165
	WEIGHT	lbs	5.5	7	13	22
		kg	2.5	3.0	5.5	10.0

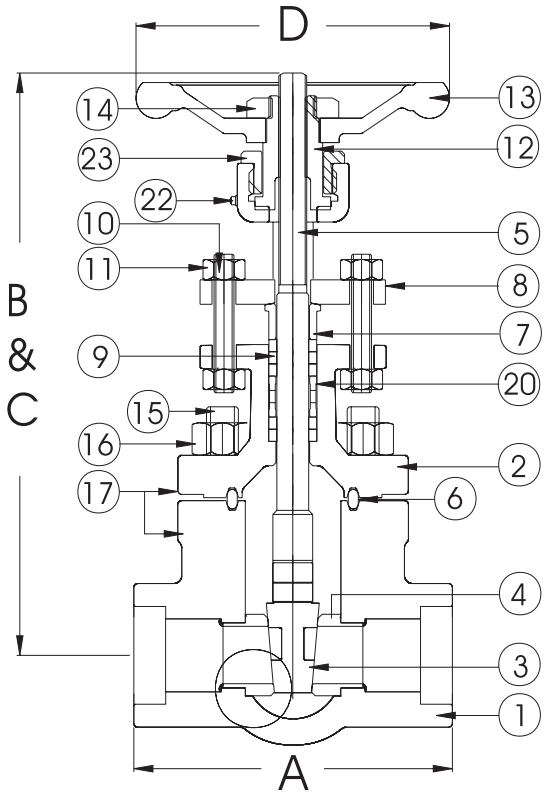

No	Description	Material Specifications
1	BODY	ASTM A-494 GR.M35-1 (UNS N04400)
2	BONNET	ASTM A-494 GR.M35-1 (UNS N04400)
3	WEDGE	MONEL (UNS N04400)
4	SEAT RING	MONEL (UNS N04400)
5	STEM	K500 (ASTM B-865 - UNS N05500)
6	BONNET GASKET METAL RING JOINT	SOFT STEEL (2)
7	PACKING GLAND	ASTM B-164 - UNS N04400
8	GLAND FLANGE	ASTM A-515 GR.70 or ASTM A-105
9	PACKING	GRAPHITE -95%CARBON INNER RINGS-BRIDED RINGS UPPER & LOWER
10	GLAND BOLT	ASTM A-193 GR B7M
11	GLAND BOLT NUT	ASTM A-194 GR.2HM
12	YOKE NUT	ALLUMINUM BRONZE
13	HANDWHEEL	ASTM A-536 GR.65-45-12 (1)
14	HANDWHEEL NUT	ASTM A-515 GR.70
15	BONNET STUD	ASTM A-193 GR.B7M
16	BONNET NUT	ASTM A-194 GR.2HM
17	FLANGE DETECTING PAINT	H.F. ACID DETECTING PAINT
20	LANTERN RING	MONEL (UNS N04400)
21	DOUBLE BALL GREASE FITTING	MONEL W / MONEL SPRING, BALLS & NEEDLE
22	GREASE FITTING	CARBON STEEL
23	JAM NUT	CARBON STEEL
24	INSERT	PTFE

(1) Optional Cast Steel Handwheel

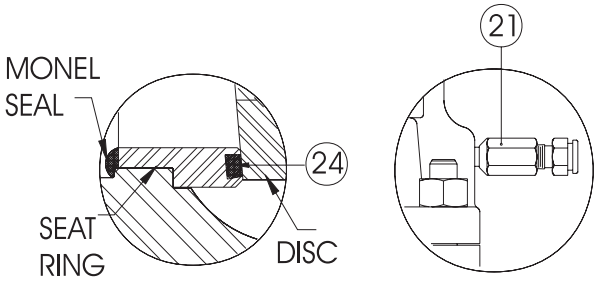

fig: GH08W-M35-U-RJ- YC-TR - Ring joint gasket, grease injector on packing chamber and PTFE insert

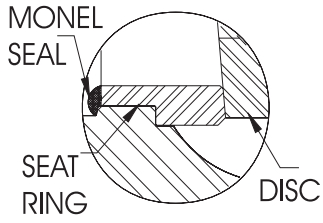

fig: GH08W-M35-RJ-U -without grease injector, metal seats

dim	Description		1/2	3/4	1	1.5
A	END TO END	in	3.70	4.34	5.00	7.00
		mm	94	110	127	178
B	CENTER TO TOP CLOSED	in	7.25	8.25	8.90	12.38
		mm	185	210	226	314
C	CENTER TO TOP OPEN	in	8.25	9.25	10.00	14.12
		mm	210	235	254	359
D	HANDWHEEL	plg	4.92	4.92	4.92	6.50
		mm	125	125	125	165
	WEIGHT	lbs	5.5	7	13	22
		kg	2.5	3.0	5.5	10.0

H.F. acid globe valves

fig: BH03R-U-YC -basic valve w/grease injector
fig: BH03R-U-YC-TD -w/grease injector & high performance seats
fig: BH03R-U -without grease injector

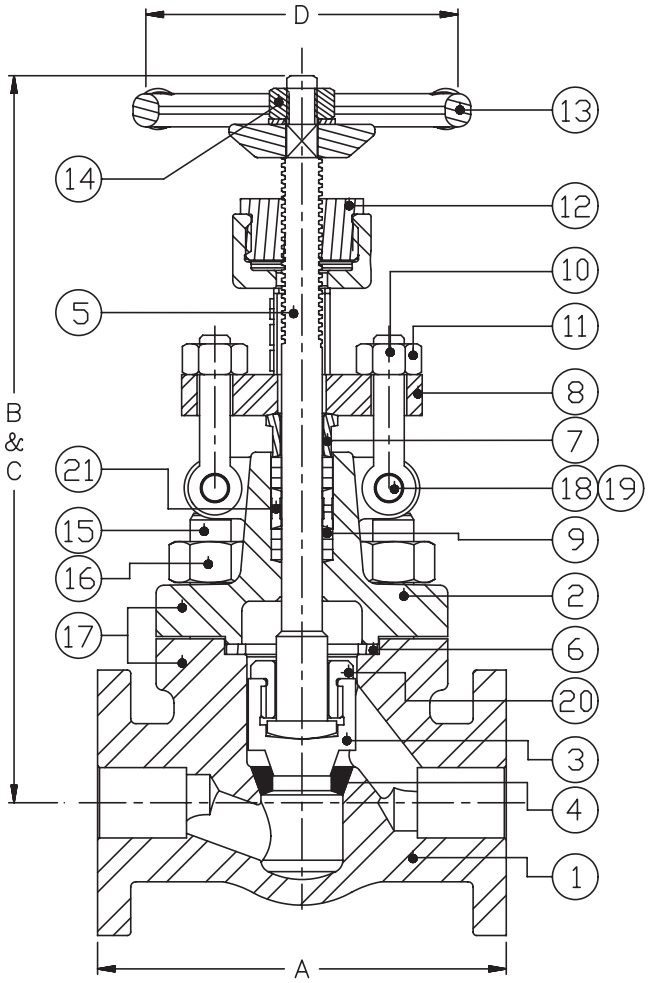

No	Description	Material Specifications
1	BODY	ASTM A-105 (1)
2	BONNET	ASTM A-105 (1)
3	DISC	MONEL (UNS N04400)
4	SEAT RING	MONEL (UNS N04400)
5	STEM	K500 (ASTM B-865 - UNS N05500)
6	BONNET GASKET SPIRAL WOUND	MONEL UNS N04400 GRAPHOIL FILLED
7	PACKING GLAND	ASTM B-164 - UNS N04400
8	GLAND FLANGE	ASTM A-515 GR.70 or ASTM A-105
9	PACKING	JOHN CRANE 237 (GRAPHOIL)
10	EYE BOLT	ASTM A-193 GR.B7M
11	EYE BOLT NUT	ASTM A- 194 GR..2HM
12	YOKE NUT	ALLUMINUM BRONZE
13	HANDWHEEL	ASTM A-536 GR.65-45-12
14	HANDWHEEL NUT	ASTM A-194 GR.2H
15	BONNET STUD	ASTM A 193 GR.B7
16	BONNET NUT	ASTM A-194 GR.2HM
17	FLANGE DETECTING PAINT	H.F. DETECTING PAINT
18	STUD	ASTM A-193 GR B7M
19	NUT	ASTM A-194 GR 2HM
20	DISC NUT	MONEL (UNS N04400)
21	LANTERN RING	MONEL (UNS N04400)
22	DOUBLE BALL GREASE FITTING	CARBON STEEL

(1) Carbon content 0.25% max.

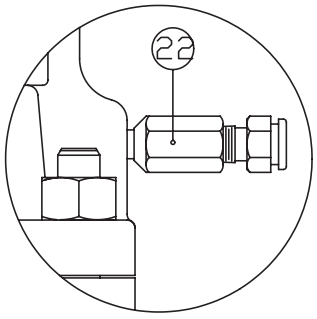

Included in
fig: BH03R-U-YC
fig: BH03R-U-YC-TD

dim	Description		1/2	3/4	1
A	FACE TO FACE FLANGED	in	6	7	8
		mm	152	177.8	203
B	CENTER TO TOP CLOSED	in	9.5	9.5	9.5
		mm	241	241	241
C	CENTER TO TOP OPEN	in	10.25	10.25	10.25
		mm	260	260	260
D	HANDWHEEL	plg	4	4.5	4.5
		mm	102	144	144
	WEIGHT	lbs	10	15	22
		kg	4.5	6.8	10

fig: BH06R -U-YC-TD - With Grease Injector on Packing Chamber and PTFE insert on Disc (HF-2 & HF-20) Marked T

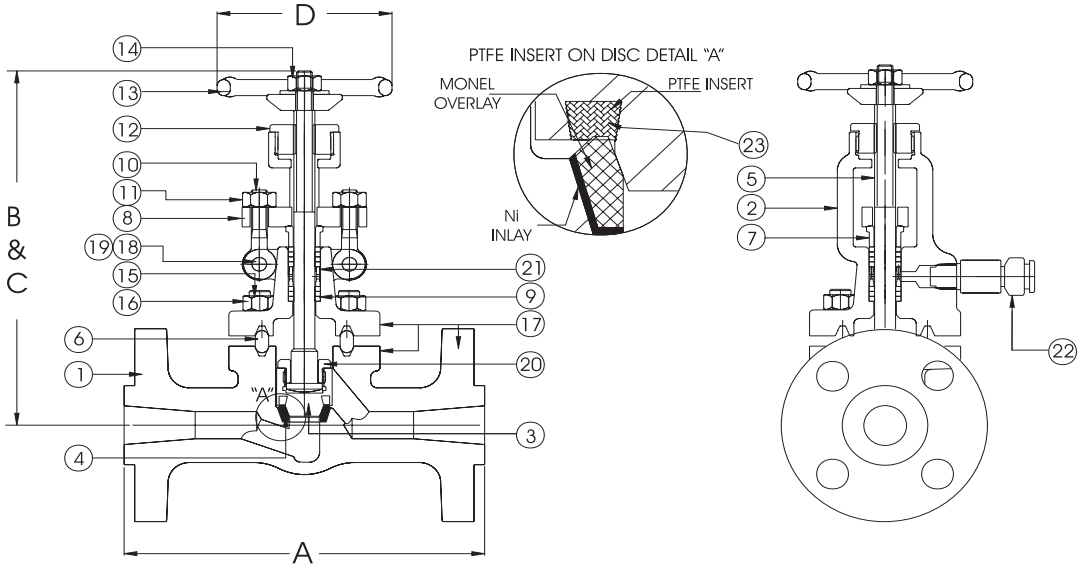

No	Description	Material Specifications	No	Description	Material Specifications
1	BODY	ASTM A105 OR ASTM A126 GR WCB (1)	12	YOKE NUT	ASTM B148 UNS C95300
2	BONNET	ASTM A105 OR ASTM A126 GR WCB (1)	13	HANDWHEEL	ASTM A-536 GR.65-45-12 (2)
3	DISC	MONEL (UNS N04400)	14	HANDWHEEL NUT	ASTM A-194 GR.2H
4	SEAT RING (overlay)	MONEL - UNS N04400	15	BONNET STUD	ASTM A-193 GR B7M
5	STEM	K 500 (ASTM B-865 - UNS N05500)	16	BONNET NUT	ASTM A-194 GR 2HM
6	BONNET GASKET (RING JOINT)	SOFT STEEL	17	FLANGE DETECTING PAINT	H.F. ACID DETECTING PAINT
7	PACKING GLAND	ASTM B-164 - UNS N04400	18	EYEBOLT PIN STUD	ALLOY K-500
8	GLAND FLANGE	ASTM A-515 GR.70 or ASTM A-105	19	EYEBOLT PIN STUD NUT	ALLOY 400
9	PACKING	GRAPHITE -95%CARBON INNER RINGS-BRIDED RINGS UPPER & LOWER	20	DISC NUT	MONEL (UNS N04400)
10	EYE BOLT	ASTM A 193-GR B7M	21	LANTERN RING	ASTM B-164-UNS - N04400
11	EYE BOLT NUT	ASTM A-194 GR 2HM	22	DOUBLE BALL GREASE FITTING	CARBON STEEL W / MONEL SPRING, BALLS & NEEDLE
			23	INSERT	PTFE

(1) Chemical Composition per UOP Spec. 801 - 440
(2) Crbon Steel Optional

dim	Description		1/2	3/4	1
A	FACE TO FACE FLANGED	in	6.5	7.5	8.5
		mm	165	191	216
B	CENTER TO TOP CLOSED	in	8.9	8.9	9.00
		mm	226	226	228
C	CENTER TO TOP OPEN	in	9.68	9.68	9.88
		mm	246	246	251
D	HANDWHEEL	plg	4.92	4.92	4.92
		mm	125	125	125
	WEIGHT	lbs	10	15	22
		kg	4.5	6.8	10

H.F. acid globe valves

fig: BH06R -U-RJ-YC-YB - With Grease Injector on Packing Chamber and Body Seat Ring (HF-2 & HF-20) Marked A

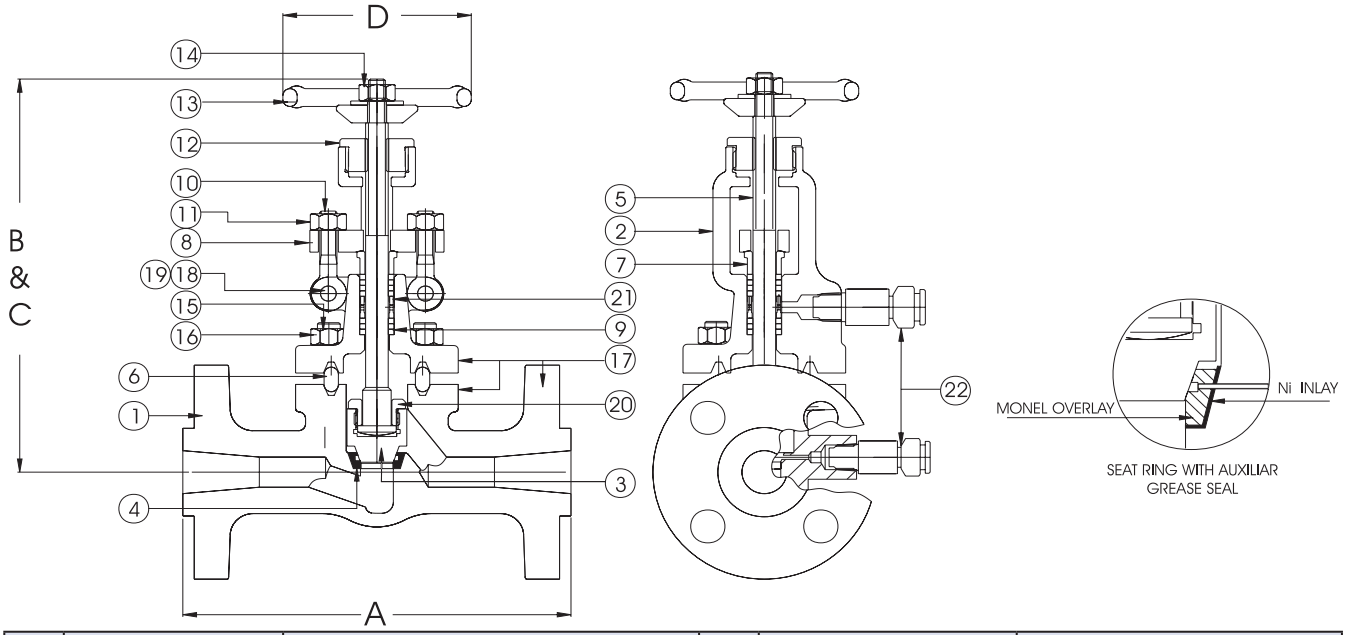

No	Description	Material Specifications	No	Description	Material Specifications
1	BODY	ASTM A105 OR ASTM A126 GR WCB (1)	12	YOKE NUT	ASTM B148 UNS C95300
2	BONNET	ASTM A105 OR ASTM A126 GR WCB (1)	13	HANDWHEEL	ASTM A-536 GR.65-45-12 (2)
3	DISC	MONEL (UNS N04400)	14	HANDWHEEL NUT	ASTM A-194 GR.2H
4	SEAT RING (overlay)	MONEL - UNS N04400	15	BONNET STUD	ASTM A-193 GR B7M
5	STEM	K 500 (ASTM B-865 - UNS N05500)	16	BONNET NUT	ASTM A-194 GR 2HM
6	BONNET GASKET (RING JOINT)	SOFT STEEL	17	FLANGE DETECTING PAINT	H.F. ACID DETECTING PAINT
7	PACKING GLAND	ASTM B-164 - UNS N04400	18	EYEBOLT PIN STUD	ALLOY K-500
8	GLAND FLANGE	ASTM A-515 GR.70 or ASTM A-105	19	EYEBOLT PIN STUD NUT	ALLOY 400
9	PACKING	GRAPHITE -95%CARBON INNER RINGS-BRIDED RINGS UPPER & LOWER	20	DISC NUT	MONEL (UNS N04400)
10	EYE BOLT	ASTM A 193-GR B7M	21	LANTERN RING	ASTM B-164-UNS - N04400
11	EYE BOLT NUT	ASTM A-194 GR 2HM	22	DOUBLE BALL GREASE FITTING	CARBON STEEL W / MONEL SPRING, BALLS & NEEDLE

(1) Chemical Composition per UOP Spec. 801 - 440
(2) Crbon Steel Optional

dim	Description		1/2	3/4	1
A	FACE TO FACE FLANGED	in	6.5	7.5	8.5
		mm	165	191	216
B	CENTER TO TOP CLOSED	in	8.9	8.9	9.00
		mm	226	226	228
C	CENTER TO TOP OPEN	in	9.68	9.68	9.88
		mm	246	246	251
D	HANDWHEEL	plg	4.92	4.92	4.92
		mm	125	125	125
	WEIGHT	lbs	10	15	22
		kg	4.5	6.8	10

fig: BH06R-M35-U-RJ-YC-YB - With Grease Injector on Packing Chamber and Body Seat Ring (HF-1 & HF-10)

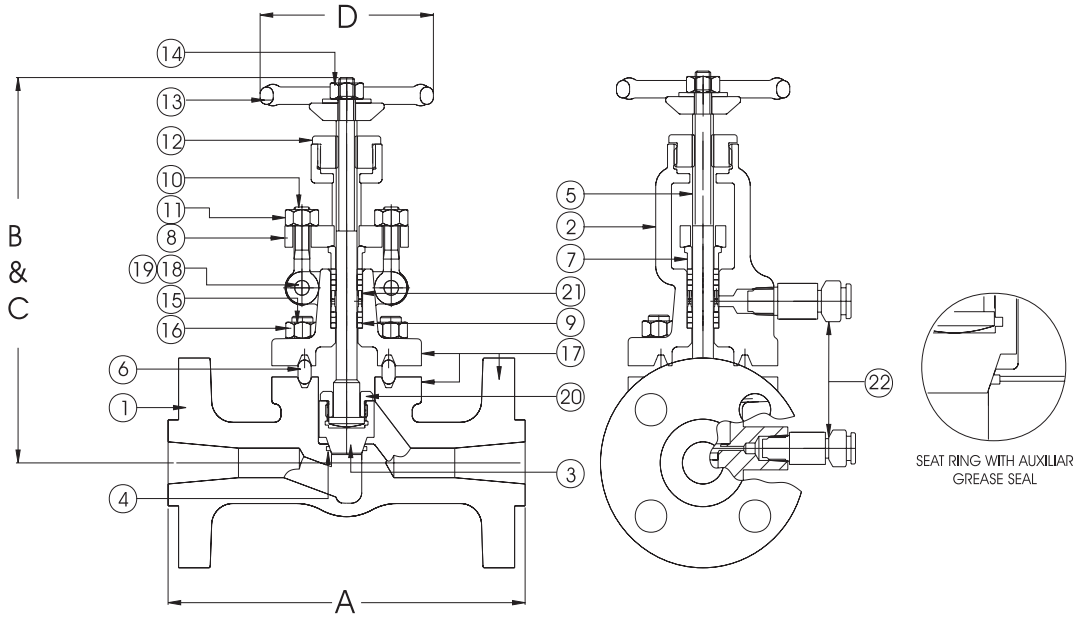

No	Description	Material Specifications	No	Description	Material Specifications
1	BODY	ASTM A-494 GR.M35-1 (UNS N04400)	12	YOKE NUT	ASTM B148 UNS C95300
2	BONNET	ASTM A-494 GR.M35-1 (UNS N04400)	13	HANDWHEEL	ASTM A-536 GR.65-45-12 (1)
3	DISC	MONEL (UNS N04400)	14	HANDWHEEL NUT	ASTM A-194 GR.2H
4	SEAT RING (integral)	ASTM A-494 GR.M35-1 (UNS N04400)	15	BONNET STUD	ASTM A-193 GR B7M
5	STEM	K 500 (ASTM B-865 - UNS N05500)	16	BONNET NUT	ASTM A-194 GR 2HM
6	BONNET GASKET (RING JOINT)	MONEL - UNS N04400	17	FLANGE DETECTING PAINT	H.F. ACID DETECTING PAINT
7	PACKING GLAND	ASTM B-164 - UNS N04400	18	EYEBOLT PIN STUD	ALLOY K-500
8	GLAND FLANGE	ASTM A-515 GR.70 or ASTM A-105	19	EYEBOLT PIN STUD NUT	ALLOY 400
9	PACKING	GRAPHITE -95%CARBON INNER RINGS-BRIDED RINGS UPPER & LOWER	20	DISC NUT	MONEL (UNS N04400)
10	EYE BOLT	ASTM A 193-GR B7M	21	LANTERN RING	ASTM B-164-UNS - N04400
11	EYE BOLT NUT	ASTM A-194 GR 2HM	22	DOUBLE BALL GREASE FITTING	MONEL W / MONEL SPRING, BALLS & NEEDLE

(1) Carbon Steel Optional

dim	Description		1/2	3/4	1
A	FACE TO FACE FLANGED	in	6.5	7.5	8.5
		mm	165	191	216
B	CENTER TO TOP CLOSED	in	8.9	8.9	9.00
		mm	226	226	228
C	CENTER TO TOP OPEN	in	9.68	9.68	9.88
		mm	246	246	251
D	HANDWHEEL	plg	4.92	4.92	4.92
		mm	125	125	125
	WEIGHT	lbs	10	15	22
		kg	4.5	6.8	10

H.F. acid globe valves

fig: BH08W-U-RJ-YC-TD w/ grease injector on packing chamber and PTFE insert (HF-2 & HF-20) Marked T -U -basic valve (without grease injector)

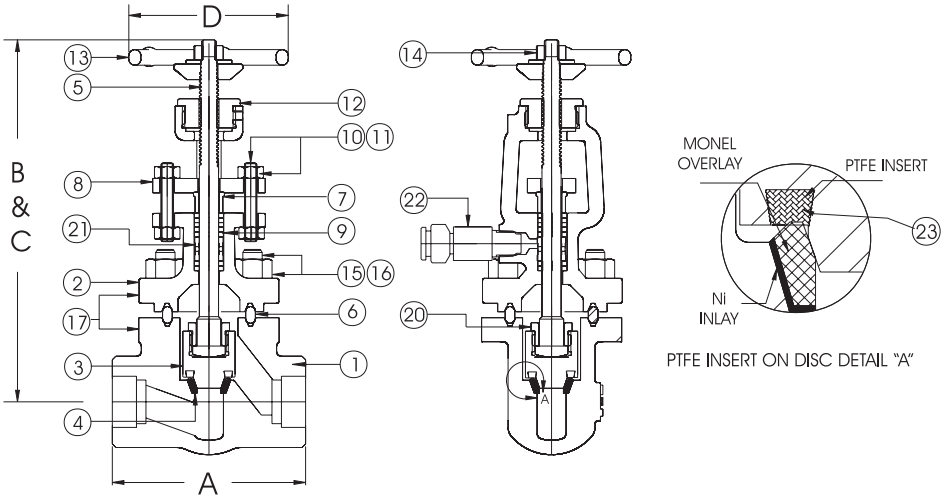

No	Description	Material Specifications	No	Description	Material Specifications
1	BODY	ASTM A105 OR ASTM A126 GR WCB (1)	12	YOKE NUT	ASTM B148 UNS C95300
2	BONNET	ASTM A105 OR ASTM A126 GR WCB (1)	13	HANDWHEEL	ASTM A-536 GR.65-45-12 (2)
3	DISC	MONEL (UNS N04400)	14	HANDWHEEL NUT	ASTM A-194 GR.2H
4	SEAT RING (overlay)	MONEL - UNS N04400	15	BONNET STUD	ASTM A-193 GR B7M
5	STEM	K 500 (ASTM B-865 - UNS N05500)	16	BONNET NUT	ASTM A-194 GR 2HM
6	BONNET GASKET (RING JOINT)	SOFT STEEL	17	FLANGE DETECTING PAINT	H.F. ACID DETECTING PAINT
7	PACKING GLAND	ASTM B-164 - UNS N04400	20	DISC NUT	MONEL (UNS N04400)
8	GLAND FLANGE	ASTM A-515 GR.70 or ASTM A-105	21	LANTERN RING	ASTM B-164-UNS - N04400
9	PACKING	GRAPHITE -95%CARBON INNER RINGS-BRIDED RINGS UPPER & LOWER	22	DOUBLE BALL GREASE FITTING	CARBON STEEL W / MONEL SPRING, BALLS & NEEDLE
10	PACKING BOLT	ASTM A 193-GR B7M	23	INSERT	PTFE
11	PACKING BOLT NUT	ASTM A-194 GR 2HM			

(1) Chemical Composition per UOP Spec. 801 - 440
(2) Carbon Steel Optional

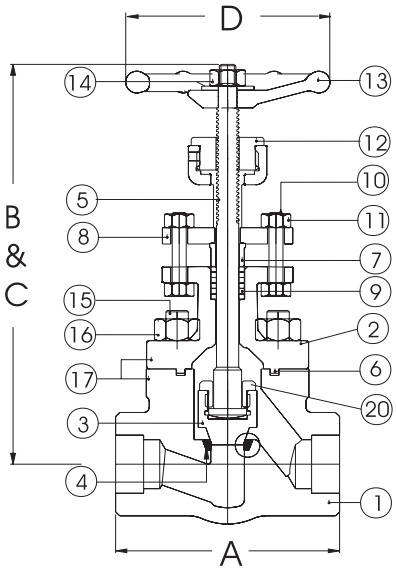

fig: BH08W-U w/optional spiral wound gasket, metal seats (HF-5 & HF-50; HF-4 & HF- 40) Marked M (without grease injector)

METAL SEATS

dim	Description		1/2	3/4	1	1.5
A	END TO END	in	3.54	4.00	5.00	7.00
		mm	94	94	127	178
B	CENTER TO TOP CLOSED	in	8.88	8.88	9.25	12.00
		mm	226	226	235	305
C	CENTER TO TOP OPEN	in	9.5	9.5	10.00	13.00
		mm	241	241	254	330
D	HANDWHEEL	plg	4.92	4.92	4.92	6.50
		mm	125	125	125	165
	WEIGHT	lbs	7	7.1	13	22
		kg	3.0	3.2	5.5	10.0

fig: BH08W-U-RJ-YC-YB w/ grease injector on packing chamber and seat ring (HF-2 & HF-20) Marked A -U -basic valve (without grease injector)

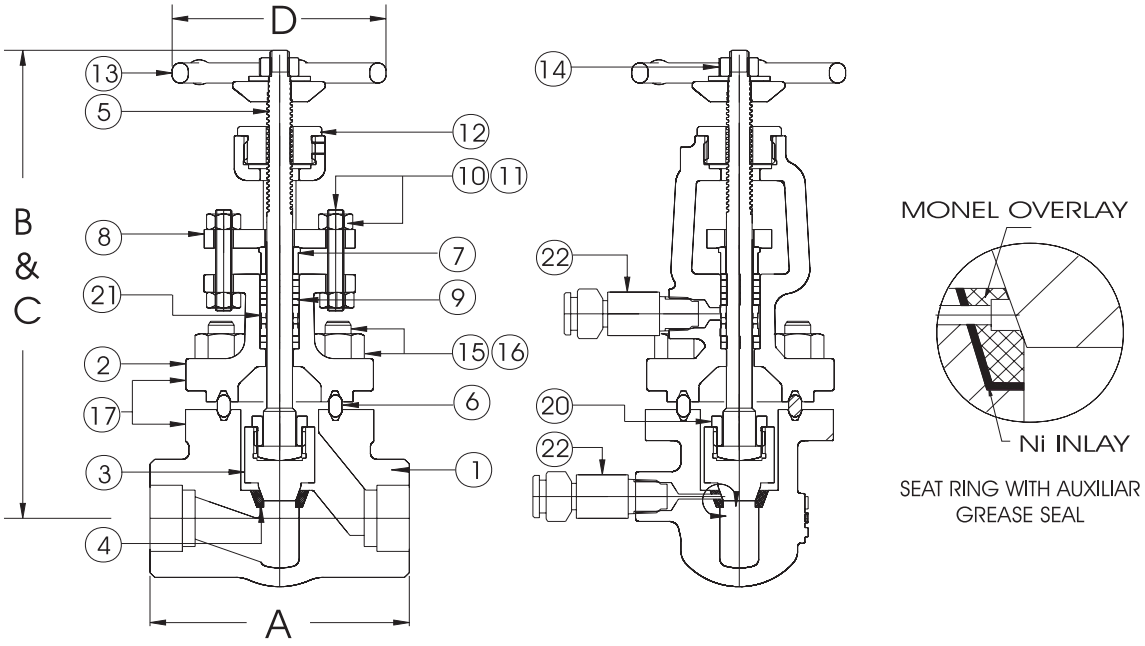

No	Description	Material Specifications	No	Description	Material Specifications
1	BODY	ASTM A105 OR ASTM A126 GR WCB (1)	12	YOKE NUT	ASTM B148 UNS C95300
2	BONNET	ASTM A105 OR ASTM A126 GR WCB (1)	13	HANDWHEEL	ASTM A-536 GR.65-45-12 (2)
3	DISC	MONEL (UNS N04400)	14	HANDWHEEL NUT	ASTM A-194 GR.2H
4	SEAT RING (overlay)	MONEL - UNS N04400	15	BONNET STUD	ASTM A-193 GR B7M
5	STEM	K 500 (ASTM B-865 - UNS N05500)	16	BONNET NUT	ASTM A-194 GR 2HM
6	BONNET GASKET (RING JOINT)	SOFT STEEL	17	FLANGE DETECTING PAINT	H.F. ACID DETECTING PAINT
7	PACKING GLAND	ASTM B-164 - UNS N04400	20	DISC NUT	MONEL (UNS N04400)
8	GLAND FLANGE	ASTM A-515 GR.70 or ASTM A-105	21	LANTERN RING	ASTM B-164-UNS - N04400
9	PACKING	GRAPHITE -95%CARBON INNER RINGS-BRIDED RINGS UPPER & LOWER	22	DOUBLE BALL GREASE FITTING	CARBON STEEL W / MONEL SPRING, BALLS & NEEDLE
10	PACKING BOLT	ASTM A 193-GR B7M			
11	PACKING BOLT NUT	ASTM A-194 GR 2HM			

(1) Chemical Composition per UOP Spec. 801 - 440
(2) Carbon Steel Optional

dim	Description		1/2	3/4	1	1.5
A	END TO END	in	3.54	4.00	5.00	7.00
		mm	94	94	127	178
B	CENTER TO TOP CLOSED	in	8.88	8.88	9.25	12.00
		mm	226	226	235	305
C	CENTER TO TOP OPEN	in	9.5	9.5	10.00	13.00
		mm	241	241	254	330
D	HANDWHEEL	plg	4.92	4.92	4.92	6.50
		mm	125	125	125	165
	WEIGHT	lbs	7	7.1	13	22
		kg	3.0	3.2	5.5	10.0

H.F. acid check valves

fig: LH03R -U

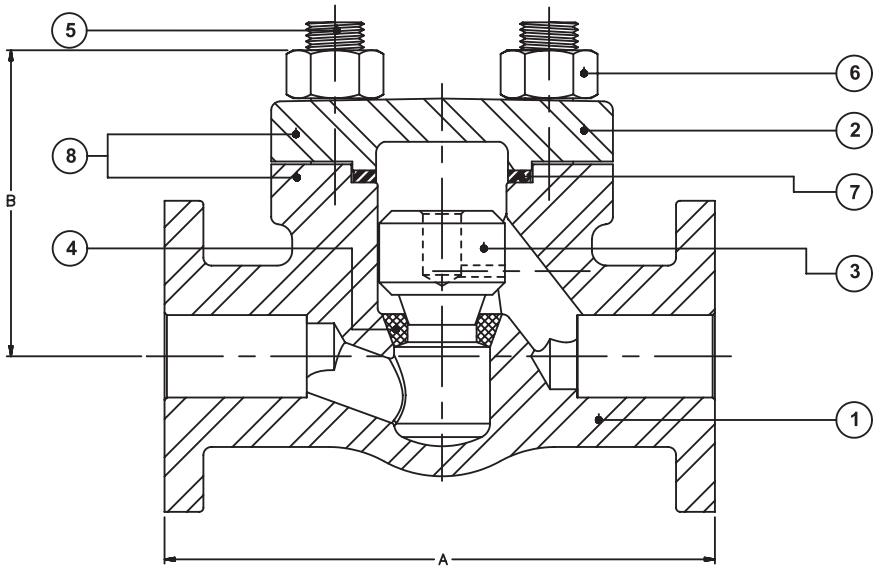

No	Description	Material Specifications
1	BODY	ASTM A-105 OR ASTM A216 GR WCB (1)
2	COVER	ASTM A-105 OR ASTM A216 GR WCB (1)
3	DISC	MONEL (UNS N04400)
4	SEAT RING	MONEL (UNS N04400)
5	COVER CAP STUD	ASTM A-193 GR.B7M
6	COVER CAP NUT	ASTM A-194 GR 2HM
7	BONNET GASKET SPIRAL WOUND	MONEL UNS N04400 GRAPHOIL FILLED
8	FLANGE DETECTING PAINT	H.F. DETECTING PAINT

(1) Chemical Composition per UOP Spec. 801 - 440

dim	Description		1/2	3/4	1
A	FACE TO FACE FLANGED	in	6.0	7.0	8.0
		mm	152.4	177.8	203.2
B	CENTER TO TOP	in	2.5	3.0	3.38
		mm	64	76	87
	WEIGHT	lbs	7	12	16
		kg	3.18	5.4	7.3

fig: LH03R-M35-U

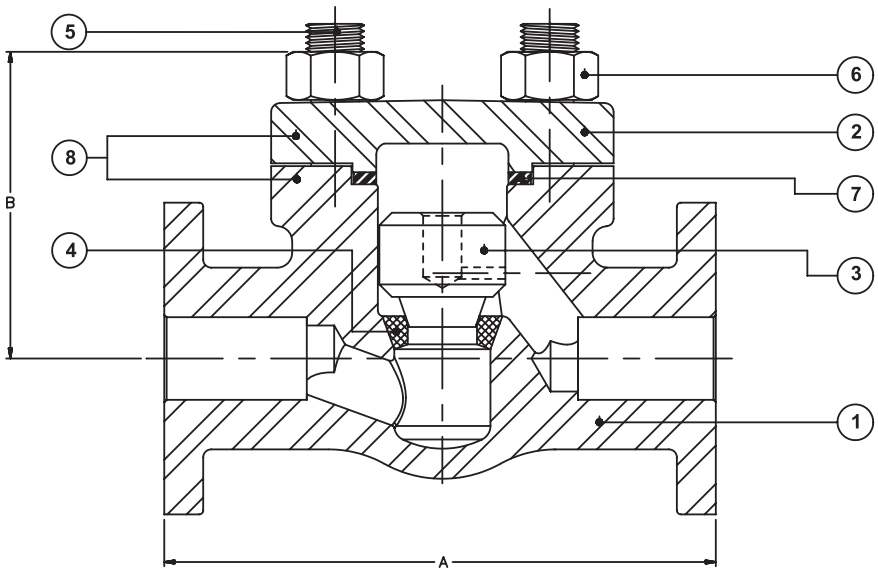

No	Description	Material Specifications
1	BODY	ASTM A-494 GR.M35-1 (UNS N04400)
2	COVER	ASTM A-494 GR.M35-1 (UNS N04400)
3	DISC	MONEL (UNS N04400)
4	SEAT RING	MONEL (UNS N04400)
5	COVER CAP BOLT	ASTM A-193 GR.B7M
6	COVER CAP NUT	ASTM A-194 GR.2HM
7	BONNET GASKET RING JOINT	MONEL UNS N04400
8	FLANGE DETECTING PAINT	H.F. DETECTING PAINT

dim	Description		1/2	3/4	1
A	FACE TO FACE FLANGED	in	6.0	7.0	8.0
		mm	152.4	177.8	203.2
B	CENTER TO TOP	in	2.5	3.0	3.38
		mm	64	76	87
	WEIGHT	lbs	7	12	16
		kg	3.18	5.4	7.3

H.F. acid check valves

fig: LH06R -U

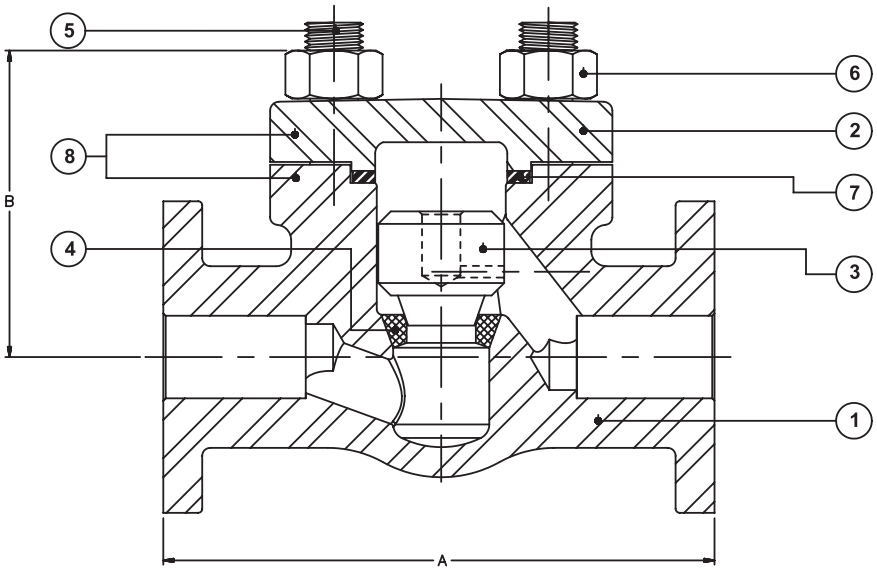

No	Description	Material Specifications
1	BODY	ASTM A-105 OR ASTM A216 GR WCB (1)
2	COVER	ASTM A-105 OR ASTM A216 GR WCB (1)
3	DISC	MONEL (UNS N04400)
4	SEAT RING	MONEL (UNS N04400)
5	COVER CAP STUD	ASTM A-193 GR.B7M
6	COVER CAP NUT	ASTM A-194 GR 2HM
7	BONNET GASKET SPIRAL WOUND	MONEL UNS N04400 GRAPHOIL FILLED
8	FLANGE DETECTING PAINT	H.F. DETECTING PAINT

(1) Chemical Composition per UOP Spec. 801 - 440

dim	Description		1/2	3/4	1
A	FACE TO FACE FLANGED	in	6.5	7.5	8.5
		mm	165	191	216
B	CENTER TO TOP	in	2.5	3.0	3.38
		mm	64	76	87
	WEIGHT	lbs	8	14	19
		kg	3.6	6.4	8.6

fig: LH06R-M35-U -RJ. Class HF-1 & HF-10

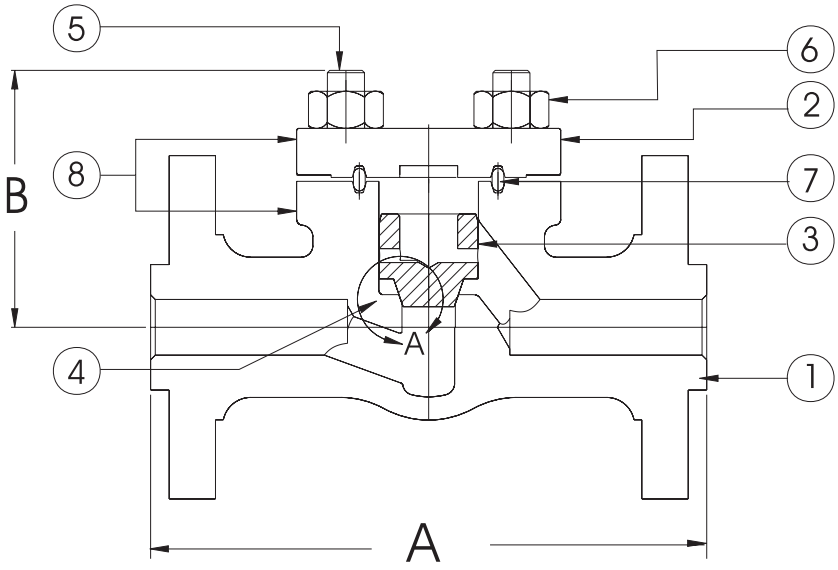

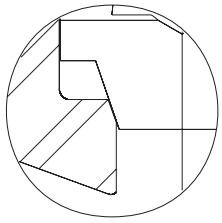

DETAIL "A" INTEGRAL SEAT RINGS

No	Description	Material Specifications
1	BODY	ASTM A-494 GR.M35-1 (UNS N04400)
2	COVER	ASTM A-494 GR.M35-1 (UNS N04400)
3	DISC	MONEL (UNS N04400)
4	SEAT RING	MONEL (UNS N04400)
5	COVER CAP BOLT	ASTM A-193 GR.B7M
6	COVER CAP NUT	ASTM A-194 GR.2HM
7	BONNET GASKET RING JOINT	MONEL UNS N04400
8	FLANGE DETECTING PAINT	H.F. DETECTING PAINT

dim	Description		1/2	3/4	1
A	FACE TO FACE FLANGED	in	6.5	7.5	8.5
		mm	165	191	216
B	CENTER TO TOP	in	3.0	3.25	3.38
		mm	76	83	87
	WEIGHT	lbs	10	14	19
		kg	4.5	6.4	8.6

H.F. acid check valves

fig: LH08W-U-RJ -w/Ring Joint Gasket, Class HF-2 & HF-20

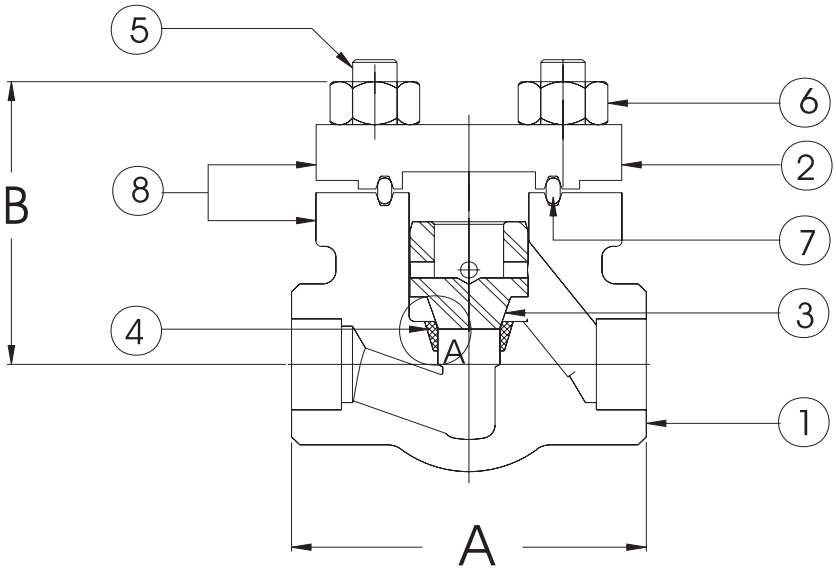

DETAIL "A" METAL SEATS

No	Description	Material Specifications
1	BODY	ASTM A-105 OR ASTM A216 GR WCB (1)
2	COVER	ASTM A-105 OR ASTM A216 GR WCB (1)
3	DISC	MONEL (UNS N04400)
4	SEAT RING	MONEL (UNS N04400)
5	COVER CAP STUD	ASTM A-193 GR.B7M
6	COVER CAP NUT	ASTM A-194 GR 2HM
7	BONNET GASKET RING JOINT	SOFT STEEL
8	FLANGE DETECTING PAINT	H.F. DETECTING PAINT

(1) Chemical Composition per UOP Spec. 801 - 440

dim	Description		1/2	3/4	1
A	END TO END	in	3.54	4.0	5.00
		mm	90	101	127
B	CENTER TO TOP	in	3.0	3.15	3.38
		mm	76	80	87
	WEIGHT SW ENDS	lbs	6	6	9
		kg	2.7	2.7	4.1

fig: LH08W -U, Class HF-4 & HF-40; HF-5 & HF- 50

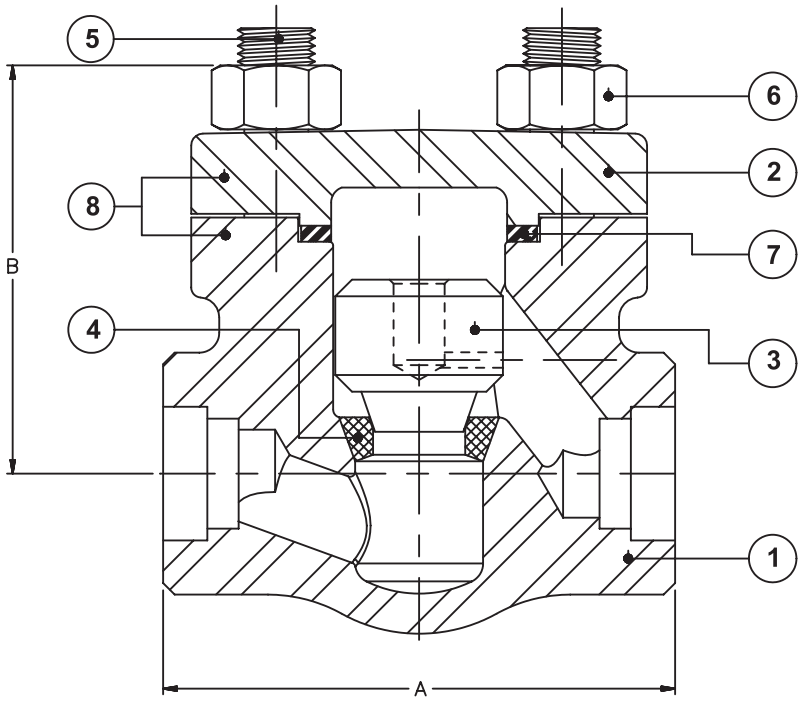

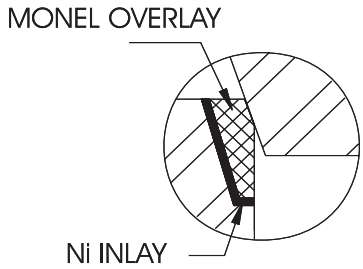

No	Description	Material Specifications
1	BODY	ASTM A-105 OR ASTM A216 GR WCB (1)
2	COVER	ASTM A-105 OR ASTM A216 GR WCB (1)
3	DISC	MONEL (UNS N04400)
4	SEAT RING	MONEL (UNS N04400)
5	COVER CAP STUD	ASTM A-193 GR.B7M
6	COVER CAP NUT	ASTM A-194 GR 2HM
7	BONNET GASKET SPIRAL WOUND	MONEL UNS N04400 GRAPHOIL FILLED
8	FLANGE DETECTING PAINT	H.F. DETECTING PAINT

(1) Chemical Composition per UOP Spec. 801 - 440

dim	Description		1/2	3/4	1	1.5
A	END TO END	in	3.54	4.0	5.00	5.00
		mm	90	101	130	130
B	CENTER TO TOP	in	3.0	3.15	3.38	3.38
		mm	76	80	87	87
	WEIGHT SW ENDS	lbs	6	6	9	20
		kg	2.7	2.7	4.1	9.1

H.F. acid gate valves

fig: GH01R-U
UOP Classes HF-4 & HF-40

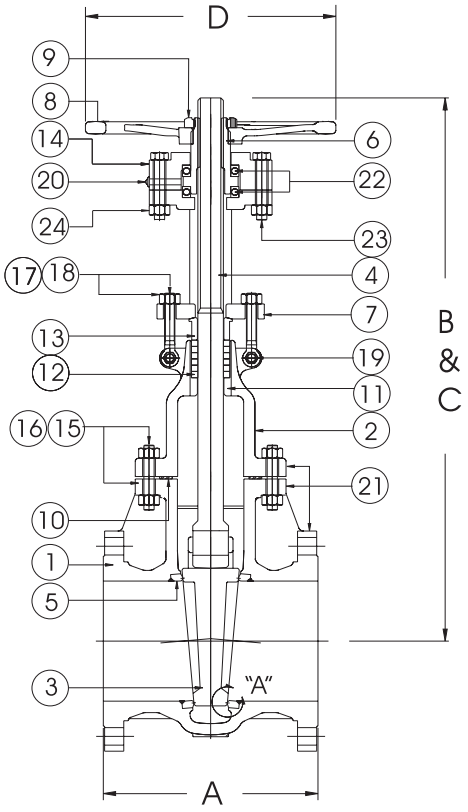

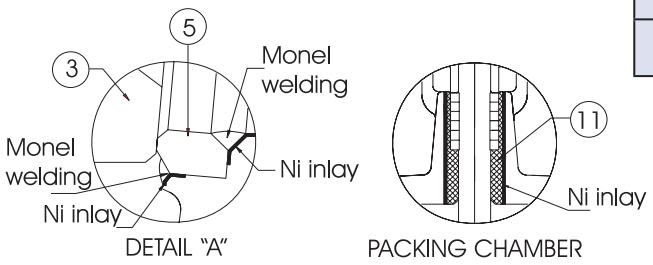

No	Description	Material Specifications
1	BODY	ASTM A-216 GR.WCB (1)
2	BONNET	ASTM A-216 GR.WCB (1)
3	WEDGE	ASTM A-494 GR.M35-1 (UNS N04400)
4	STEM	K 500 (ASTM B-865 - UNS N05500)
5	SEAT RING	ASTM B- 127 - UNS N04400
6	YOKE NUT	ASTM B-148 -C95600
7	GLAND FLANGE	ASTM A-515 GR.70
8	HANDWHEEL	ASTM A-536 GR.65-45-12
9	HANDWHEEL NUT	ASTM A-515 GR.70
10	BONNET GASKET	CORRUGATED STEEL GRAPHOIL COATED
11	MONEL SLEEVE OVERLAY	MONEL 400
12	PACKING	GRAPHITE -95%CARBON INNER RINGS-BRIDED RINGS UPPER & LOWER
13	PACKING GLAND	ASTM B-164 - UNS N04400
14	BEARING CAP	ASTM A-515 GR.70
15	BONNET STUD	ASTM A-193 GR.B7M
16	BONNET STUD NUT	ASTM A-194 GR.2HM
17	EYEBOLT	ASTM A-193 GR.B7M
18	EYEBOLT NUT	ASTM A-194 GR.2HM
19	EYEBOLT PIN STUD	ALLOY K 500
20	GREASE FITTING	STEEL
21	FLANGE DETECTING PAINT	H.F. DETECTING PAINT
22	BEARINGS	ALLOY STEEL
23	BEARING CAP STUD	ASTM A-193 GR.B7
24	BEARING CAP STUD NUT	ASTM A-194 GR.2H

(1) Chemical composition limits per UOP specification 801 - 440
*Optional.

dim	Description		1.5	2	3	4	6	8	10	12	14	16	18	20	24	30	36
A	FACE TO FACEFLANGED	in	6.5	7	8	9	10.5	11.5	13	14	15	16	17	18	20	24	28
		mm	165	178	203	229	267	292	330	356	381	406	432	457	508	610	711
B	CENTER TO TOP CLOSED	in	14.3	14.3	16.5	20	26	32.5	39	42.5	46.5	52.5	57.88	68.10	79	85.88	91.5
		mm	362	362	419	508	660	826	991	1080	1181	1334	1470	1730	2007	2181	2324
C	CENTER TO TOP OPEN	in	17.3	17.3	20.00	25.0	33.0	41.75	50.0	55.5	59.0	68.5	76.0	88.50	103.0	114.0	128.0
		mm	438	438	508	635	838	1060	1270	1410	1499	1740	1930	2248	2616	2896	3251
D	HANDWHEEL	plg	8.25	8.25	10.25	10.25	14.25	14.25	20.25	20.25	24.25	24.25	30.25	30.25	36.25	36.25	36.25
		mm	210	210	260	260	362	362	514	514	616	616	768	768	921	921	921
	WEIGHT FLANGED ENDS	lbs	40	44	81.5	121	194	198	446	646	851	1213	1625	1980	3014	5334	8092
		kg	18	20	37	55	88	135	202	293	386	550	737	898	1367	2419	3670

fig: GH03R-U- RJ - YC-TD
w/RTJ bonnet gasket, grease injector & PTFE Insert (HF-2, HF-20)

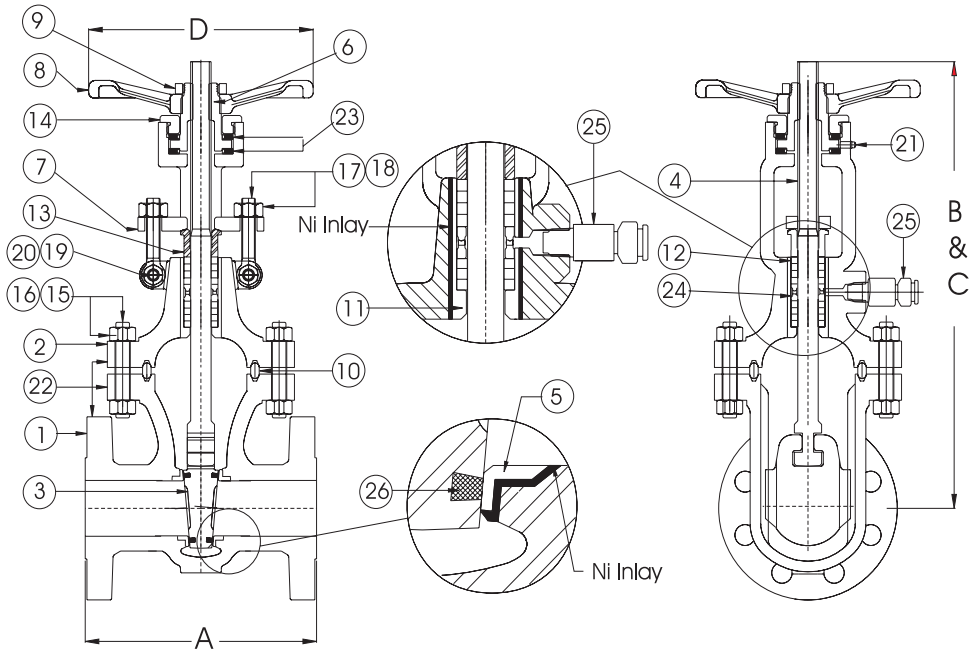

fig: GH03R-U
Metal seated,
without grease injector,
w/spiral wound gasket
(HF-5, HF-50)

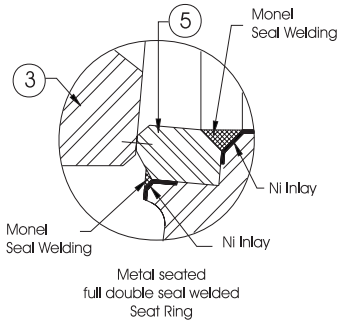

No	Description	Material Specifications	No	Description	Material Specifications
1	BODY	ASTM A-216 GR.WCB (1)	15	BONNET STUD	ASTM A-193 GR.B7M
2	BONNET	ASTM A-216 GR.WCB (1)	16	BONNET STUD NUT	ASTM A-194 GR.2HM
3	WEDGE	ASTM A-494 GR.M35-1 (UNS N04400)	17	EYEBOLT	ASTM A-193 GR.B7M
4	STEM	K 500 (ASTM B-865 - UNS N05500)	18	EYEBOLT NUT	ASTM A-194 GR.2HM
5	SEAT RING (2)	MONEL (UNS N04400)	19	EYEBOLT PIN STUD	ALLOY K-500
6	YOKE NUT	ASTM B-148 C95600	20	EYEBOLT PIN STUD NUT	ALLOY 400
7	GLAND FLANGE	ASTM A-515 GR.70	21	GREASE FITTING	CARBON STEEL
8	HANDWHEEL	ASTM A-536 GR.65-45-12 (4)	22	FLANGE DETECTING PAINT	YELLOW - ON GUARD
9	HANDWHEEL NUT	ASTM A-515 GR.70	23	BEARINGS	ALLOY STEEL
10	BONNET GASKET METAL RING JOIT (3)	SOFT STEEL	24	LANTERN RING	ASTM B-164-UNS - N04400
11	MONEL SLEEVE	MONEL - UNS N04400	25	DOUBLE BALL GREASE FITTING	CARBON STEEL W / MONEL SPRING, BALLS & NEEDLE
12	PACKING	GRAPHITE -95%CARBON INNER RINGS- BRIDED RINGS UPPER & LOWER	26	INSERT	PTFE
13	PACKING GLAND	ASTM B-164 - UNS N04400			
14	RETAINER NUT	ASTM A-515 GR.70			

(1) Composition limits per UOP Spec. 801-440 (2) Full Double seal welded seat ring fom 3" and up. Or full weld Monel Overlay over Ni. Inlay (3) Optional Monel/Graphite Spiral Wound Gasket (4) Optional Cast Steel Handwheel

dim	Description		1.5	2	3	4	6	8	10	12	14	16	18	20	24	30	36
A	FACE TO FACE FLANGED	in	7.5	8.5	11.13	12.0	15.88	16.5	18.0	19.75	30.0	33.0	36.0	39.0	45.0	55.0	68.0
		mm	191	216	283	305	403	419	457	502	762	838	914	991	1143	1397	1727
B	CENTER TO TOP CLOSED	in	14.25	14.25	17.50	21.38	28.50	28.50	39.62	46.75	53.62	57.38	66.50	72.0	85.0	118.0	121.0
		mm	362	362	445	543	724	724	1006	1187	1362	1457	1689	2007	2159	2997	3073
C	CENTER TO TOP OPEN	in	17.25	17.25	20.75	23.38	35.0	35.0	50.25	59.62	67.62	73.75	84.75	90.25	109.75	148.0	156.0
		mm	438	438	527	594	889	889	1276	1514	1718	1873	2153	2292	2788	3759	3962
D	HANDWHEEL	plg	8.25	8.25	10.25	10.25	14.25	14.25	20.25	20.25	24.25	24.25	30.25	30.25	36.25	36.25	36.25
		mm	209	209	260	260	362	362	514	514	616	616	768	768	921	921	921
	WEIGHT FLANGED ENDS	lbs	44	49	86	174	287	406	642	860	1334	2436	2977	3312	3881	9526	1349
		kg	20	22	39	79	130	184	291	390	605	1105	1350	1502	1760	4320	6120

H.F. acid gate valves

fig: GH03R-M35-U-RJ-YC-YB -w/RTJ bonnet gasket & grease injectors on packing chamber and body seat rings. (HF-1, HF-10)

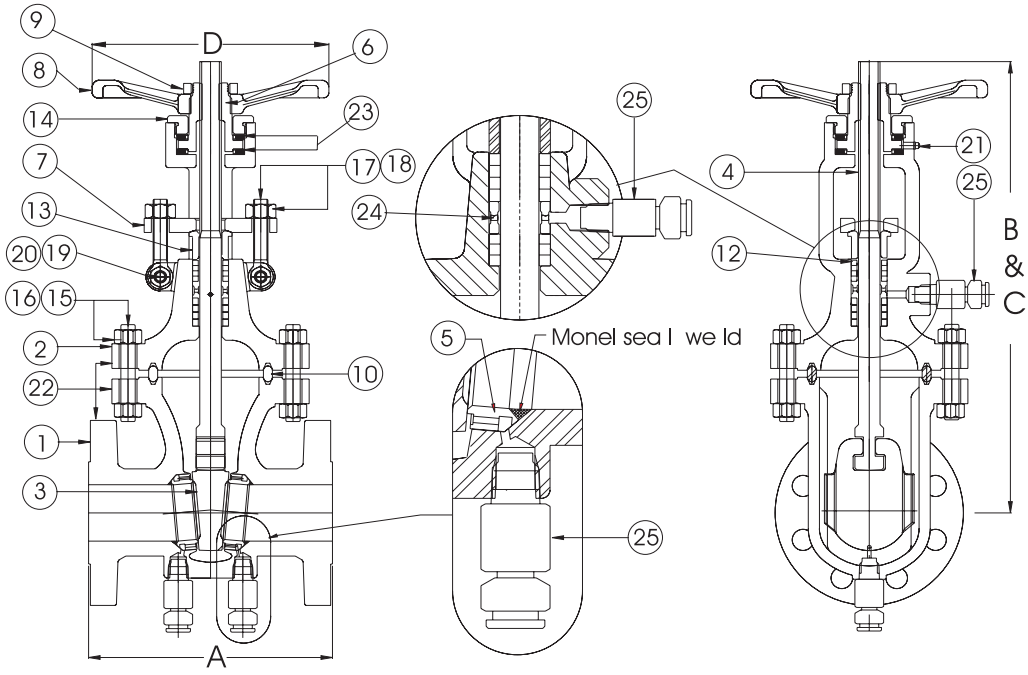

No	Description	Material Specifications	No	Description	Material Specifications
1	BODY	ASTM A-494 GR. M35-1 (1)	15	BONNET STUD	ASTM A-193 GR.B7M
2	BONNET	ASTM A-494 GR. M35-1 (1)	16	BONNET STUD NUT	ASTM A-194 GR.2HM
3	WEDGE	ASTM A-494 GR.M35-1 (UNS N04400) (1)	17	EYEBOLT	ASTM A-193 GR.B7M
4	STEM	K 500 (ASTM B-865 - UNS N05500)	18	EYEBOLT NUT	ASTM A-194 GR.2HM
5	SEAT RING	MONEL (UNS N04400)	19	EYEBOLT PIN STUD	ALLOY K-500
6	YOKE NUT	ASTM B-148 C95600	20	EYEBOLT PIN STUD NUT	ALLOY 400
7	GLAND FLANGE	ASTM A-515 GR.70	21	GREASE FITTING	CARBON STEEL
8	HANDWHEEL	ASTM A-536 GR.65-45-12 (2)	22	FLANGE DETECTING PAINT	YELLOW - ON GUARD
9	HANDWHEEL NUT	ASTM A-515 GR.70	23	BEARINGS	ALLOY STEEL
10	BONNET GASKET METAL RING JOIT	MONEL (UNS N04400)	24	LANTERN RING	ASTM B-164-UNS - N04400
11			25	DOUBLE BALL GREASE FITTING	MONEL (UNS N04400) W / MONEL SPRING, BALLS & NEEDLE
12	PACKING	GRAPHITE -95%CARBON INNER RINGS-BRIDED RINGS UPPER & LOWER	26		
13	PACKING GLAND	ASTM B-164 - UNS N04400			
14	RETAINER NUT	ASTM A-515 GR.70			

(1) Material requirements per UOP Spec. 801-440 (2) Optional Cast Steel Handwheel

dim	Description		1.5	2	3	4	6	8	10	12
A	FACE TO FACE FLANGED	in	7.5	8.5	11.13	12.0	15.88	16.5	18.0	19.75
		mm	191	216	283	305	403	419	457	502
B	CENTER TO TOP CLOSED	in	14.25	14.25	17.50	21.38	28.50	34.25	39.62	46.75
		mm	362	362	445	543	724	870	1006	1187
C	CENTER TO TOP OPEN	in	17.25	17.25	20.75	23.38	35.0	42.8	50.25	59.62
		mm	438	438	527	594	889	1087	1276	1514
D	HANDWHEEL	plg	8.25	8.25	10.25	10.25	14.25	20.25	20.25	20.25
		mm	209	209	260	260	362	514	514	514

H.F. acid globe valves

asme class 150/300
carbon steel
size 1 1/2" - 6"
flanged ends

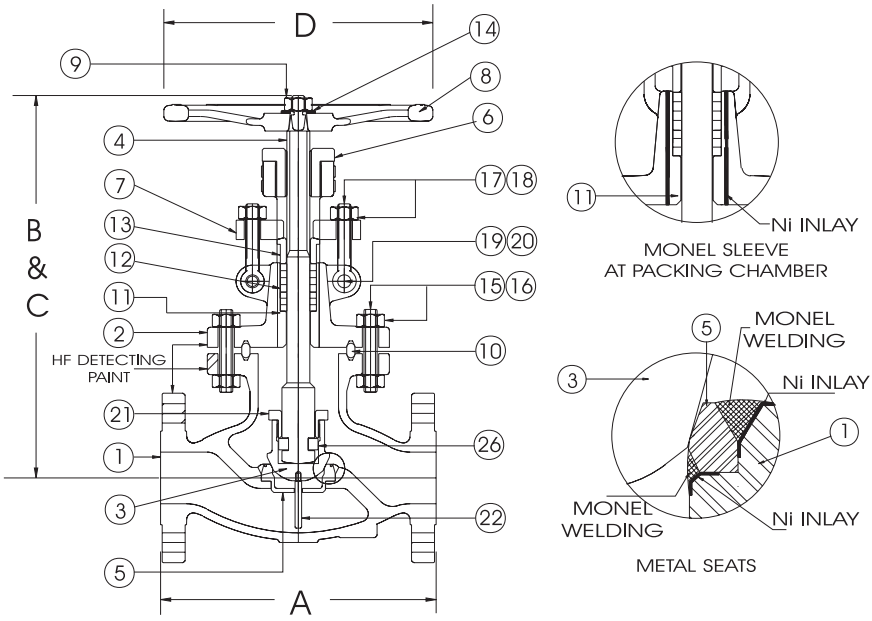

No	Description	Material Specifications	No	Description	Material Specifications
1	BODY	ASTM A126 GR WCB (1)	14	HANDWHEEL NUT WASHER	11-13 CR.
2	BONNET	ASTM A126 GR WCB (1)	15	BONNET STUD	ASTM A-193 GR B7M
3	DISC	MONEL (UNS N04400)	16	BONNET NUT	ASTM A-194 GR 2HM
4	STEM	K 500 (ASTM B-865 - UNS N05500)	17	EYE BOLT	ASTM A-193 GR B7M
5	SEAT RING	MONEL - UNS N04400	18	EYE BOLT NUT	ASTM A-194 GR 2HM
6	YOKE NUT	ASTM B148 UNS C95300	19	STUD	ALLOY K500
7	GLAND FLANGE	ASTM A-515 GR.70 or ASTM A-105	20	NUT	ALLOY 400
8	HANDWHEEL	ASTM A-536 GR.65-45-12 (2)	21	DISC NUT	MONEL (UNS N04400)
9	HANDWHEEL NUT	ASTM A -194 GR 2H	22	DISC GUIDE	MONEL (UNS N04400)
10	BONNET GASKET (RING JOINT)	SOFT STEEL (3)			
11	BONNET SLEVE	MONEL (UNS N04400)			
12	PACKING	GRAPHITE -95%CARBON INNER RINGS-BRIDED RINGS UPPER & LOWER			
13	PACKING GLAND	ASTM B-164 - UNS N04400	26	DISC RETAINER	ASTM B-164-UNS - N04400

(1) Chemical Composition per UOP Spec. 801 - 440 (2) Carbon Steel Optional (3) Optional Spiral Wound Gasket Monel with Graphite

asme class 150

fig: BH01R-U - w/RTJ bonnet gasket,
Class HF-4 & HF-40 (Marked M)

dim	Description		1.5	2	3	4	6
A	FACE TO FACE FLANGED	in	6.5	8	9.50	11.50	16.0
		mm	165	203	241	292	406
B	CENTER TO TOP CLOSED	in	11.38	13.4	15.8	18.31	22.25
		mm	289	340	388	465	565
C	CENTER TO TOP OPEN	in	12.25	14.0	16.62	19.50	24.0
		mm	311	356	422	495	610
D	HANDWHEEL	plg	8	10.25	10.25	10.25	14.25
		mm	203	260	260	260	362
	WEIGHT FLANGED ENDS	lbs	30	57	95	135	247
		kg	14	26	43	61	112

asme class 300

fig: BH03R-U - w/RTJ bonnet gasket,
Class HF-5 & HF-50 (Marked M)

dim	Description		1.5	2	3	4	6
A	FACE TO FACE FLANGED	in	9.0	10.50	12.50	14.00	17.50
		mm	229	267	318	356	445
B	CENTER TO TOP CLOSED	in	14.38	14.56	17.50	19.94	25.12
		mm	365	370	445	506	638
C	CENTER TO TOP OPEN	in	15.19	15.63	18.50	21.25	26.88
		mm	386	397	470	540	683
D	HANDWHEEL	plg	8	10.25	10.25	14.25	20.25
		mm	203	260	260	362	514
	WEIGHT FLANGED ENDS	lbs	60	73	132	194	375
		kg	27	33	60	88	170

H.F. acid globe valves

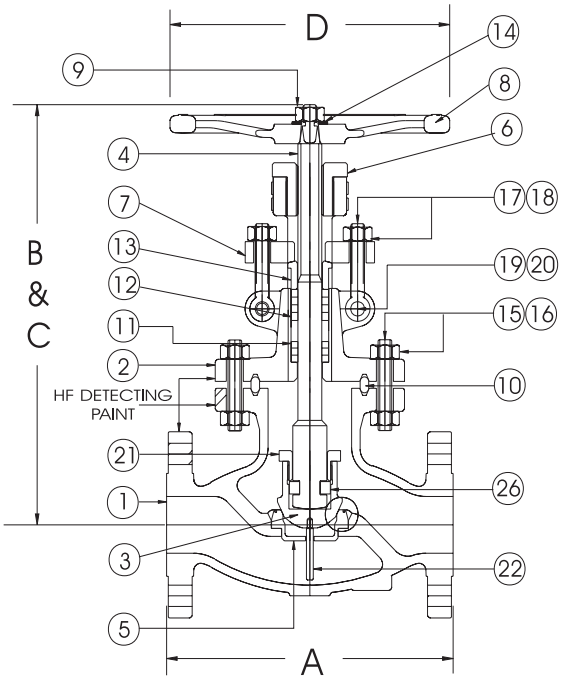

Class HF- 2 & HF- 20

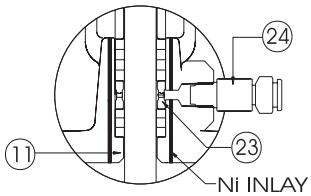

GREASE INJECTOR AT PACKING CHAMBER

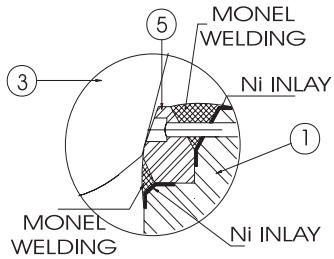

METAL SEATS WITH GREASE INJECTOR

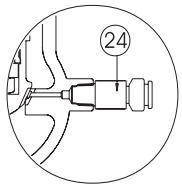

GREASE INJECTOR AT BODY SEAT

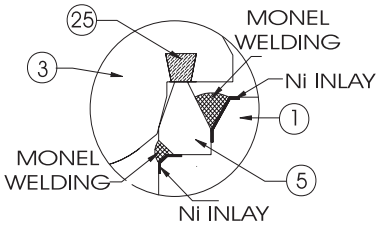

PTFE INSERT ON DISC

fig: BH03R-U-RJ-YC-TD - w/RTJ bonnet gasket, grease injector on packing & PTFE insert on disc (Marked T)
fig: BH03R-U-RJ-YC-YB - w/RTJ bonnet gasket, grease injector on packing and body seats (Marked A)

No	Description	Material Specifications	No	Description	Material Specifications
1	BODY	ASTM A126 GR WCB (1)	14	HANDWHEEL NUT WASHER	11-13 CR.
2	BONNET	ASTM A126 GR WCB (1)	15	BONNET STUD	ASTM A-193 GR B7M
3	DISC	MONEL (UNS N04400)	16	BONNET NUT	ASTM A-194 GR 2HM
4	STEM	K 500 (ASTM B-865 - UNS N05500)	17	EYE BOLT	ASTM A-193 GR B7M
5	SEAT RING	MONEL - UNS N04400	18	EYE BOLT NUT	ASTM A-194 GR 2HM
6	YOKE NUT	ASTM B148 UNS C95300	19	STUD	ALLOY K500
7	GLAND FLANGE	ASTM A-515 GR.70 or ASTM A-105	20	NUT	ALLOY 400
8	HANDWHEEL	ASTM A-536 GR.65-45-12 (2)	21	DISC NUT	MONEL (UNS N04400)
9	HANDWHEEL NUT	ASTM A -194 GR 2H	22	DISC GUIDE	MONEL (UNS N04400)
10	BONNET GASKET (RING JOINT)	SOFT STEEL	23	LANTERN RING	ASTM B-164-UNS - N04400
11	BONNET SLEVE	MONEL (UNS N04400)	24	DOUBLE BALL GREASE FITTING	CARBON STEEL W / MONEL SPRING, BALLS & NEEDLE
12	PACKING	GRAPHITE -95%CARBON INNER RINGS-BRIDED RINGS UPPER & LOWER	25	INSERT	PTFE
13	PACKING GLAND	ASTM B-164 - UNS N04400	26	DISC RETAINER	ASTM B-164-UNS - N04400

(1) Chemical Composition per UOP Spec. 801 - 440 (2) Carbon Steel Optional

dim	Description		1.5	2	3	4	6	8	10	12
A	FACE TO FACE FLANGED	in	9.0	10.50	12.50	14.00	17.50	22.00	24.5	28.00
		mm	229	267	318	356	445	559	622	711
B	CENTER TO TOP CLOSED	in	14.38	14.56	17.50	19.94	25.12	27.81	38.12	40.25
		mm	365	370	445	506	638	706	968	1022
C	CENTER TO TOP OPEN	in	15.19	15.63	18.50	21.25	26.88	31.62	39.62	44.38
		mm	386	397	470	540	683	803	1006	1127
D	HANDWHEEL	plg	8	10.25	10.25	14.25	20.25	24.25	30.25	30.25
		mm	203	260	260	362	514	616	768	768
	WEIGHT FLANGED ENDS	lbs	60	73	132	194	375	635	1058	1740
		kg	27	33	60	88	170	288	480	789

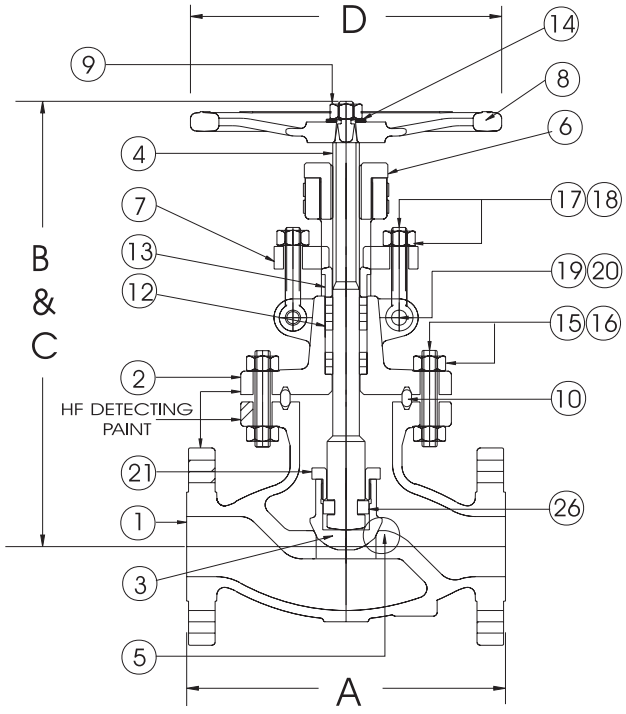

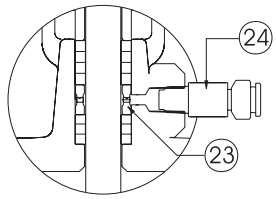

GREASE INJECTOR
AT PACKING CHAMBER

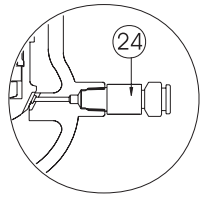

GREASE INJECTOR
AT BODY SEAT

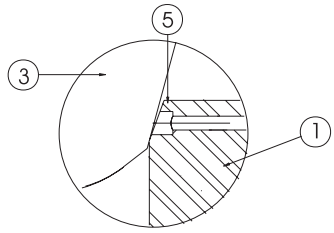

METAL SEATS
WITH GREASE
INJECTOR

fig: BH03R-M35-U-RJ-YC-YB - w/RTJ bonnet gasket, grease injector on packing and body seats (Marked B)

No	Description	Material Specifications	No	Description	Material Specifications
1	BODY	ASTM A494 GR M35-1 (UNS N04400)	14	HANDWHEEL NUT WASHER	11-13 CR.
2	BONNET	ASTM A494 GR M35-1 (UNS N04400)	15	BONNET STUD	ASTM A-193 GR B7M
3	DISC	MONEL (UNS N04400)	16	BONNET NUT	ASTM A-194 GR 2HM
4	STEM	K 500 (ASTM B-865 - UNS N05500)	17	EYE BOLT	ASTM A-193 GR B7M
5	INTEGRAL SEAT RING	ASTM A494 GR M35-1 (UNS N04400)	18	EYE BOLT NUT	ASTM A-194 GR 2HM
6	YOKE NUT	ASTM B148 UNS C95300	19	STUD	ALLOY K500
7	GLAND FLANGE	ASTM A-515 GR.70 or ASTM A-105	20	NUT	ALLOY 400
8	HANDWHEEL	ASTM A-536 GR.65-45-12 (1)	21	DISC NUT	MONEL (UNS N04400)
9	HANDWHEEL NUT	ASTM A -194 GR 2H			
10	BONNET GASKET (RING JOINT)	MONEL 400	23	LANTERN RING	ASTM B-164-UNS - N04400
			24	DOUBLE BALL GREASE FITTING	MONEL 400 W / MONEL SPRING, BALLS & NEEDLE
12	PACKING	GRAPHITE -95%CARBON INNER RINGS-BRIDED RINGS UPPER & LOWER	25	INSERT	PTFE
13	PACKING GLAND	ASTM B-164 - UNS N04400	26	DISC RETAINER	ASTM B-164-UNS - N04400

(1) Carbon Steel Optional

dim	Description		1.5	2	3	4	6	8
A	FACE TO FACE FLANGED	in	9.0	10.50	12.50	14.00	17.50	22.00
		mm	229	267	318	356	445	559
B	CENTER TO TOP CLOSED	in	14.38	14.56	17.50	19.94	25.12	27.81
		mm	365	370	445	506	638	706
C	CENTER TO TOP OPEN	in	15.19	15.63	18.50	21.25	26.88	31.62
		mm	386	397	470	540	683	803
D	HANDWHEEL	plg	8	10.25	10.25	14.25	20.25	24.25
		mm	203	260	260	362	514	616
	WEIGHT FLANGED ENDS	lbs	60	73	132	194	375	635
		kg	27	33	60	88	170	288

H.F. acid check valves

fig. WH01R-U , Classes HF- 4 & HF - 40
Classes HF- 5 & HF - 50

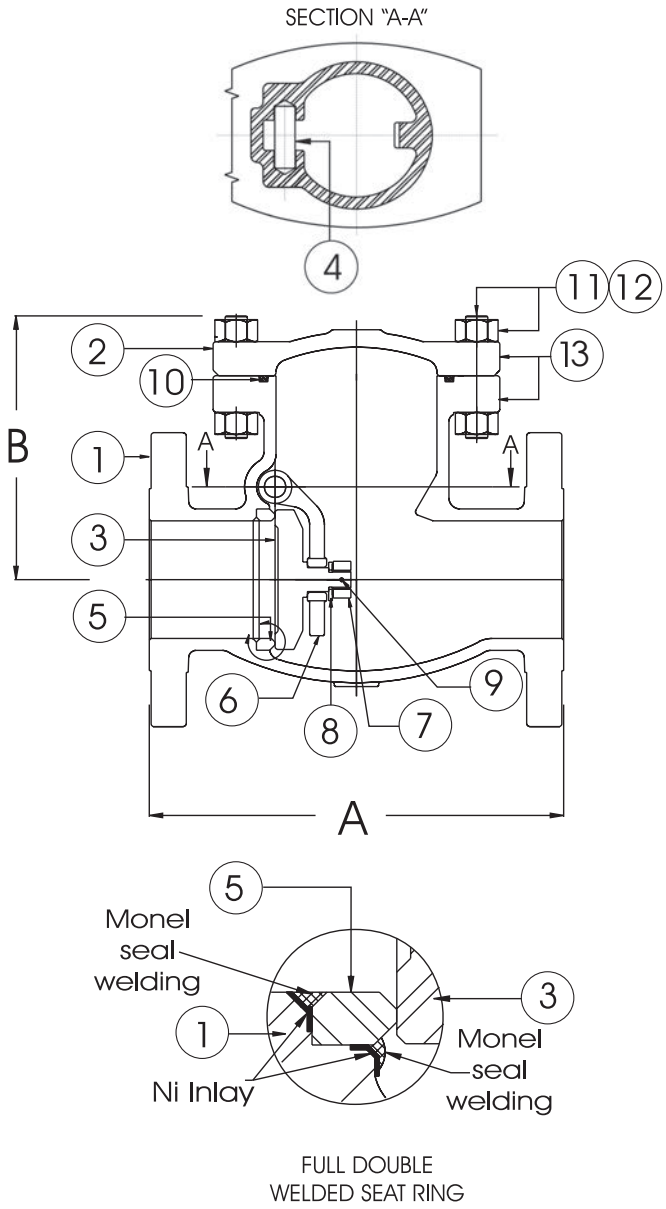

FULL DOUBLE
WELDED SEAT RING

No	Description	Material Specifications
1	BODY	ASTM A-216 GR.WCB (1)
2	COVER	ASTM A-216 GR.WCB (1)
3	DISC	ASTM A-494 GR.M35-1 (UNS N04400)
4	HINGE PIN INT.	ASTM B-164 - UNS N04400
5	SEAT RING (2)	ASTM A-494 GR.M35-1 (UNS N04400)
6	HINGE	ASTM A-494 GR.M35-1 (UNS N04400)
7	DISC NUT	ASTM B-164 - UNS N04400
8	DISC NUT WASHER	MONEL-UNS N04400
9	DISC NUT PIN	ASTM B-164 - UNS N04400
10	COVER GASKET SPIRAL WOUND	MONEL (UNS N04400/GRAPHOIL FILLED)
11	COVER STUD	ASTM A-193 GR.B7M
12	COVER STUD NUT	ASTM A-194 GR.2HM
13	FLANGE PAINT	H.F. DETECTING PAINT

(1) Chemical Composition per UOP Spec. 801 - 440

dim	Description		1.5	2	3	4	6	8	10	12	14	16	18	20	24	30
A	FACE TO FACE FLANGED	in	6.5	8	9.5	11.5	14.00	19.5	24.5	27.5	31.0	34.0	38.5	38.5	51	60
		mm	165	203	241	292	356	495	622	699	787	864	978	978	1295	1524
B	CENTER TO TOP	in	5.53	5.53	6.67	7.32	8.75	10.42	12.0	13.78	14.75	16.5	18.0	20.0	23.0	32.0
		mm	140	140	169	186	222	265	305	350	375	419	457	508	584	813
	WEIGHT FLANGED ENDS	lbs	22	35	71	101	157	318	437	648	765	1488	1616	2042	3054	4267
		kg	10	16	32	46	71	144	198	294	347	675	733	926	1385	1935

fig. WH03R-U-RJ , Classes HF- 2 & HF - 20

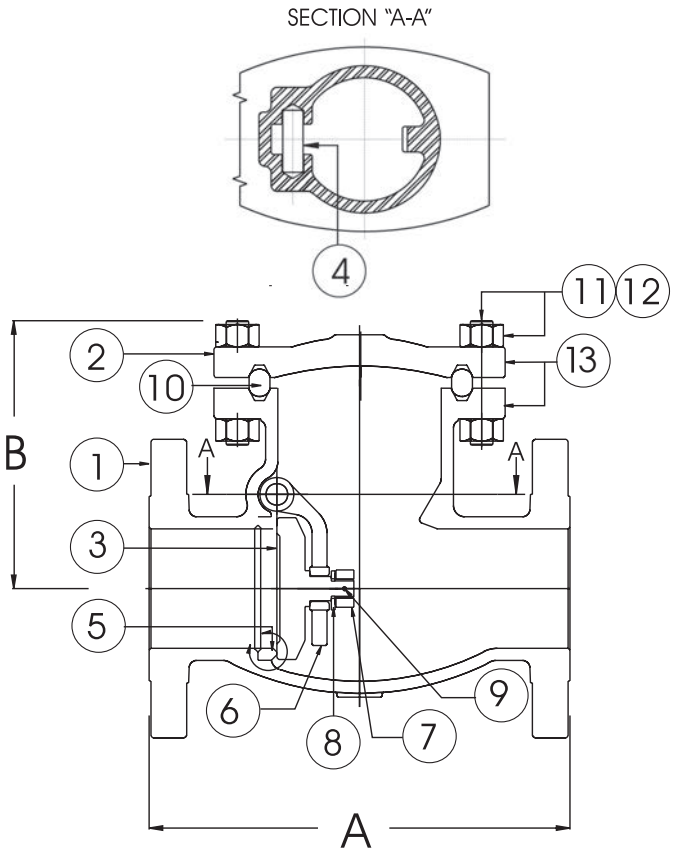

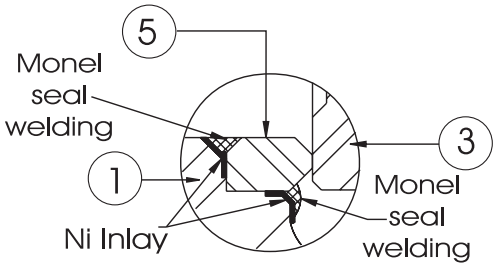

FULL DOUBLE
WELDED SEAT RING

No	Description	Material Specifications
1	BODY	ASTM A-216 GR.WCB (1)
2	COVER	ASTM A-216 GR.WCB (1)
3	DISC	ASTM A-494 GR.M35-1 (UNS N04400)
4	HINGE PIN INT.	ASTM B-164 - UNS N04400
5	SEAT RING (2)	ASTM A-494 GR.M35-1 (UNS N04400)
6	HINGE	ASTM A-494 GR.M35-1 (UNS N04400)
7	DISC NUT	ASTM B-164 - UNS N04400
8	DISC NUT WASHER	MONEL-UNS N04400
9	DISC NUT PIN	ASTM B-164 - UNS N04400
10	COVER GASKET SPIRAL WOUND	MONEL (UNS N04400/GRAPHOIL FILLED)
11	COVER STUD	ASTM A-193 GR.B7M
12	COVER STUD NUT	ASTM A-194 GR.2HM
13	FLANGE PAINT	H.F. DETECTING PAINT

(1) Chemical Composition per UOP Spec. 801 - 440

dim	Description		1.5	2	3	4	6	8	10	12	14	16	18	20	24	30
A	FACE TO FACE FLANGED	in	9.5	10.5	12.5	14.0	17.5	21.0	24.5	28.0	33.0	34.0	38.5	40.0	53.0	62.75
		mm	241	267	318	356	445	533	622	711	838	864	978	1015	1346	1594
B	CENTER TO TOP	in	6.38	6.38	7.63	9.88	11.0	13.5	14.5	16.75	17.5	20.5	24.63	27.88	31.50	38.25
		mm	162	162	194	25	279	343	368	425	445	521	625	708	300	972

H.F. acid check valves

fig. WH03-M35-U- RJ, Classes HF-1 & HF- 10

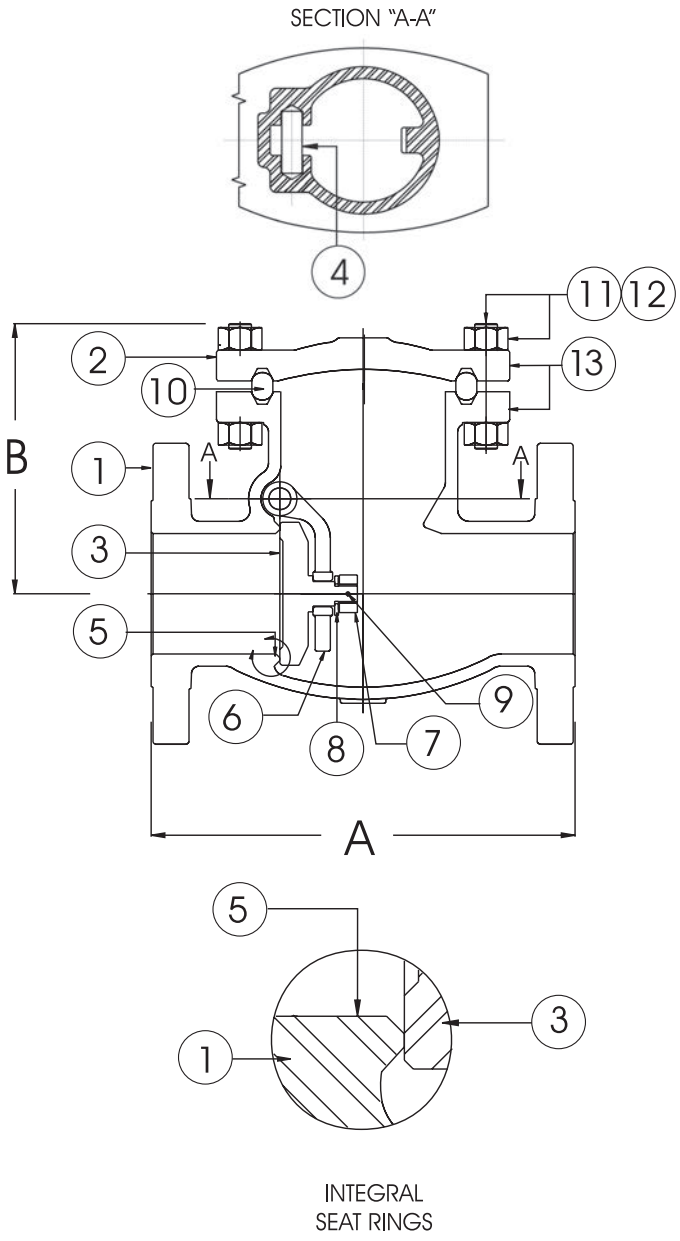

No	Description	Material Specifications
1	BODY	ASTM A-216 GR.WCB (1)
2	COVER	ASTM A-216 GR.WCB (1)
3	DISC	ASTM A-494 GR.M35-1 (UNS N04400)
4	HINGE PIN INT.	ASTM B-164 - UNS N04400
5	SEAT RING (2)	ASTM A-494 GR.M35-1 (UNS N04400)
6	HINGE	ASTM A-494 GR.M35-1 (UNS N04400)
7	DISC NUT	ASTM B-164 - UNS N04400
8	DISC NUT WASHER	MONEL-UNS N04400
9	DISC NUT PIN	ASTM B-164 - UNS N04400
10	COVER GASKET SPIRAL WOUND	MONEL (UNS N04400/GRAPHOIL FILLED)
11	COVER STUD	ASTM A-193 GR.B7M
12	COVER STUD NUT	ASTM A-194 GR.2HM
13	FLANGE PAINT	H.F. DETECTING PAINT

dim	Description		1.5	2	3	4	6	8	10	12
A	FACE TO FACE FLANGED	in	9.5	10.5	12.5	14.0	17.5	21.0	24.5	28.0
		mm	241	267	318	356	445	533	622	711
B	CENTER TO TOP	in	6.375	6.375	7.625	9.875	11.0	13.5	14.5	16.75
		mm	162	162	194	25	279	343	368	425

following Phillips recommendations

fig: GH03R-P basic valve
fig: GH03R-P-TR w/high performance seats

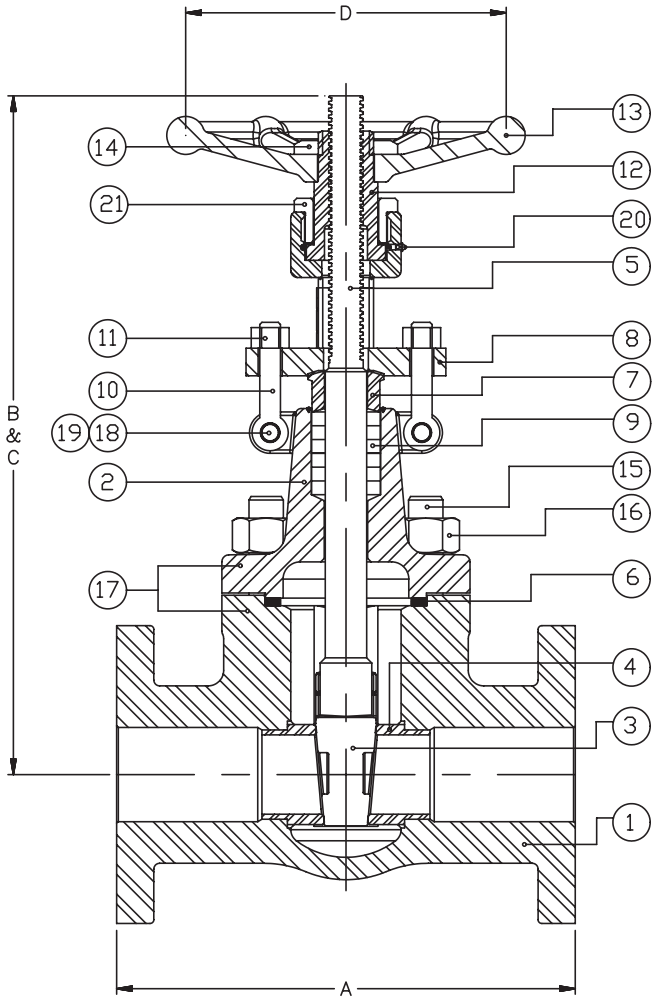

No	Description	Material Specifications
1	BODY	ASTM A-105 (1)
2	BONNET	ASTM A-105 (1)
3	DISC	MONEL (UNS N04400)
4	SEAT RING	MONEL (UNS N04400)
5	STEM	K500 (ASTM B-865 - UNS N05500)
6	BONNET GASKET SPIRAL WOUND	MONEL UNS N04400 PTFE FILLED *
7	PACKING GLAND	ASTM B-164 - UNS N04400
8	GLAND FLANGE	ASTM A-515 GR.70 or ASTM A-105
9	PACKING	PTFE-CHEVRON TYPE**
10	EYE BOLT	ASTM A-193 GR.B7M
11	EYE BOLT NUT	ASTM A-194 GR.2HM
12	YOKE NUT	B-148-UNS-C95600
13	HANDWHEEL	ASTM A-536 GR.65-45-12
14	HANDWHEEL NUT	ASTM A-515 GR.70
15	BONNET STUD	ASTM A-193 GR.B7M
16	BONNET NUT	ASTM A-194 GR 2HM
17	FLANGE DETECTING PAINT	H.F. ACID DETECTING PAINT
18	STUD	ASTM A-193 GR B7M
19	NUT	ASTM A-194 GR 2HM
20	GREASE FITTING	CARBON STEEL
21	JAM NUT	CARBON STEEL

* Optional monel/graphite spiral wound gasket.
** Optional graphoil packing.

(1) Carbon content 0.25% max.

dim	Description		1/2	3/4	1
A	FACE TO FACE FLANGED	in	5.5	6	6.5
		mm	140	152	165
B	CENTER TO TOP CLOSED	in	9	9	9
		mm	229	229	229
C	CENTER TO TOP OPEN	in	10	10	10
		mm	254	254	254
D	HANDWHEEL	in	4	4.25	4.25
		mm	102	108	108
	WEIGHT	lbs	10	15	22
		kg	4.5	6.8	6.0

H.F. acid gate valves

following Phillips recommendations

fig: GH03R-M35-P basic valve
fig: GH03R-M35-P-TR w/high performance seats

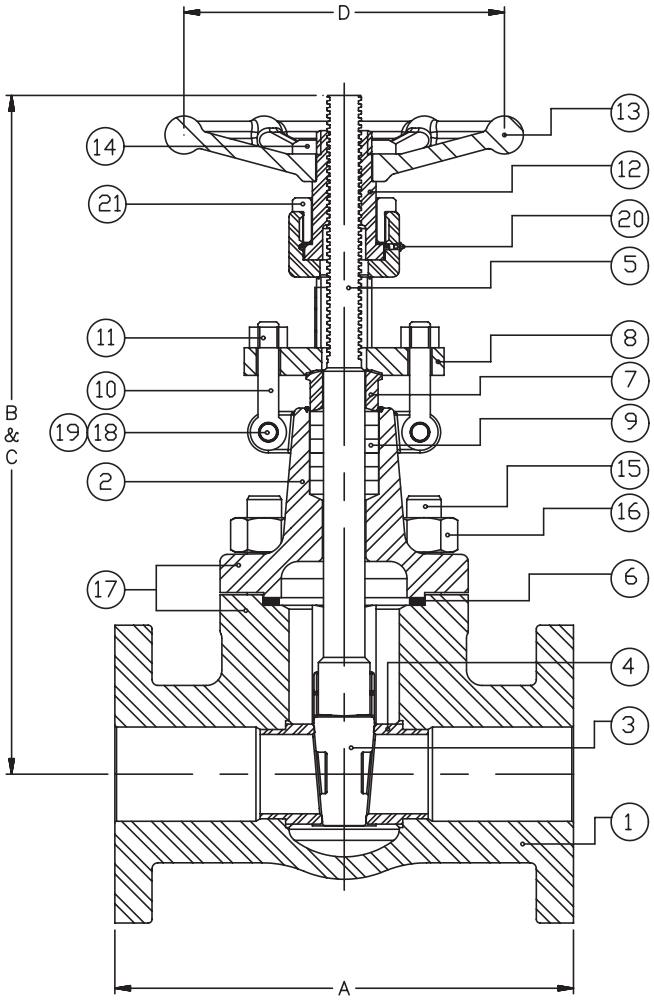

No	Description	Material Specifications
1	BODY	ASTM A-494 GR. M35-1 (UNS N04400)
2	BONNET	ASTM A-494 GR. M35-1 (UNS N04400)
3	DISC	MONEL (UNS N04400)
4	SEAT RING	MONEL (UNS N04400)
5	STEM	K500 (ASTM B-865 - UNS N05500)
6	BONNET GASKET SPIRAL WOUND	MONEL UNS N04400 PTFE FILLED *
7	PACKING GLAND	ASTM B-164 - UNS N04400
8	GLAND FLANGE	ASTM A-515 GR.70 or ASTM A-105
9	PACKING	PTFE-CHEVRON TYPE**
10	EYE BOLT	ASTM A-193 GR.B7M
11	EYE BOLT NUT	ASTM A-194 GR.2HM
12	YOKE NUT	B-148-UNS-C95600
13	HANDWHEEL	ASTM A-536 GR.65-45-12
14	HANDWHEEL NUT	ASTM A-515 GR.70
15	BONNET STUD	ASTM A-193 GR.B7M
16	BONNET NUT	ASTM A-194 GR.2HM
17	FLANGE DETECTING PAINT	H.F. ACID DETECTING PAINT
18	STUD	ASTM A-193 GR. B7M
19	NUT	ASTM A194 GR. 2HM
20	GREASE FITTING	CARBON STEEL
21	JAM NUT	CARBON STEEL

* Optional monel/graphite spiral wound gasket.
** Optional graphoil packing.

dim	Description		1/2	3/4	1
A	FACE TO FACE FLANGED	in	5.5	6	6.5
		mm	140	152	165
B	CENTER TO TOP CLOSED	in	9	9	9
		mm	229	229	229
C	CENTER TO TOP OPEN	in	10	10	10
		mm	254	254	254
D	HANDWHEEL	in	4	4.25	4.25
		mm	102	108	108
	WEIGHT	lbs	10	15	22
		kg	4.5	6.8	10

following Phillips recommendations

fig: GH06R-P basic valve
fig: GH06R-P-TR w/high performance seats

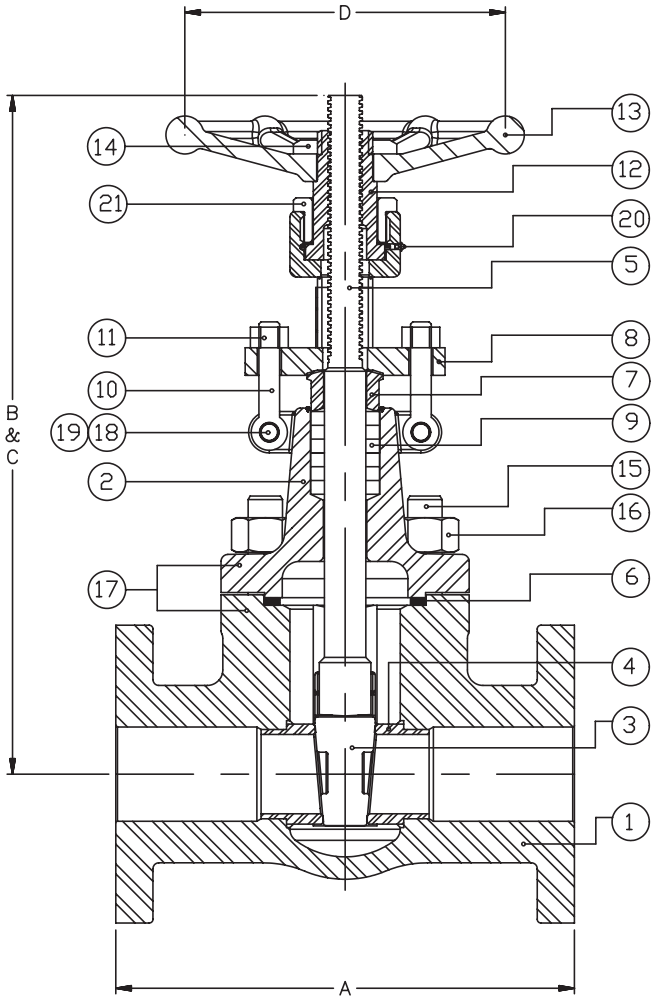

No	Description	Material Specifications
1	BODY	ASTM A-105 (1)
2	BONNET	ASTM A-105 (1)
3	DISC	MONEL (UNS N04400)
4	SEAT RING	MONEL (UNS N04400)
5	STEM	K500 (ASTM B-865 - UNS N05500)
6	BONNET GASKET SPIRAL WOUND	MONEL UNS N04400 PTFE FILLED *
7	PACKING GLAND	ASTM B-164 - UNS N04400
8	GLAND FLANGE	ASTM A-515 GR.70 or ASTM A-105
9	PACKING	PTFE-CHEVRON TYPE**
10	EYE BOLT	ASTM A-193 GR.B7M
11	EYE BOLT NUT	ASTM A-194 GR.2HM
12	YOKE NUT	B-148-UNS-C95600
13	HANDWHEEL	ASTM A-536 GR.65-45-12
14	HANDWHEEL NUT	ASTM A-515 GR.70
15	BONNET STUD	ASTM A-193 GR.B7M
16	BONNET NUT	ASTM A-194 GR 2HM
17	FLANGE DETECTING PAINT	H.F. ACID DETECTING PAINT
18	STUD	ASTM A-193 GR B7M
19	NUT	ASTM A-194 GR 2HM
20	GREASE FITTING	CARBON STEEL
21	JAM NUT	CARBON STEEL

* Optional monel/graphite spiral wound gasket.
** Optional graphoil packing.
(1) Carbon content 0.25% max.

dim	Description		1/2	3/4	1	1.5	2
A	FACE TO FACE FLANGED	in	6.44	7.5	8.5	9.5	11.5
		mm	164	191	216	241	292
B	CENTER TO TOP CLOSED	in	9	9	9	12.5	12.5
		mm	229	229	229	319	319
C	CENTER TO TOP OPEN	in	10	10	10	14.5	14.5
		mm	254	254	254	370	370
D	HANDWHEEL	in	4	4.25	4.25	5.5	8
		mm	102	108	108	140	203
	WEIGHT	lbs	13	18	24	42	64
		kg	5.9	8.2	10.9	19.1	29

H.F. acid gate valves

following Phillips recommendations

fig: GH06R-M35-P basic valve
fig: GH06R-M35-P-TR w/high performance seats

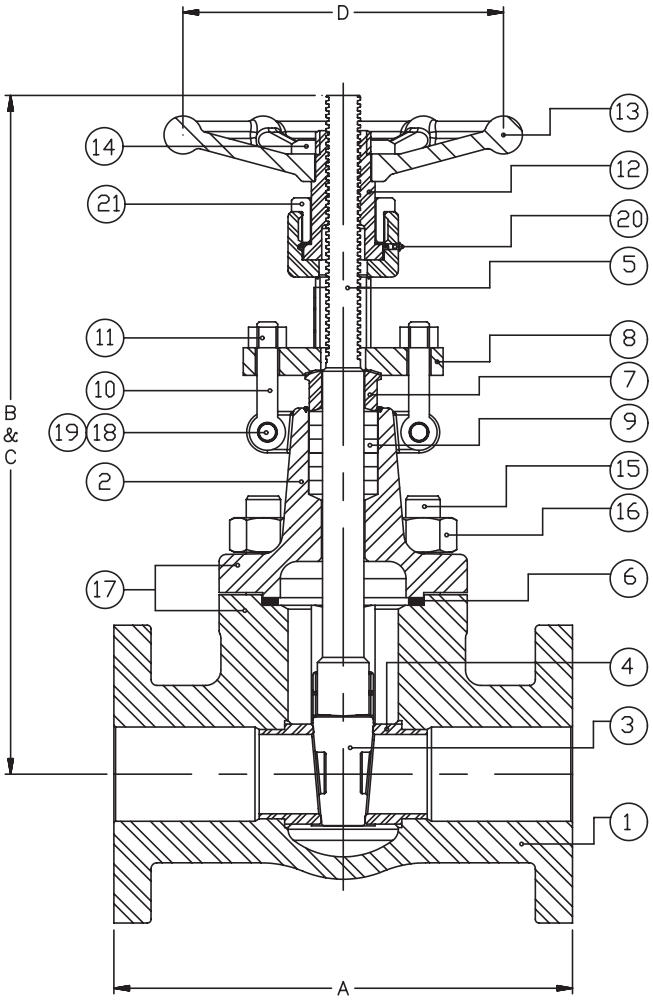

No	Description	Material Specifications
1	BODY	ASTM A-494 GR. M35-1 (UNS N04400)
2	BONNET	ASTM A-494 GR. M35-1 (UNS N04400)
3	DISC	MONEL (UNS N04400)
4	SEAT RING	MONEL (UNS N04400)
5	STEM	K500 (ASTM B-865 - UNS N05500)
6	BONNET GASKET SPIRAL WOUND	MONEL UNS N04400 PTFE FILLED *
7	PACKING GLAND	ASTM B-164 - UNS N04400
8	GLAND FLANGE	ASTM A-515 GR.70 or ASTM A-105
9	PACKING	PTFE-CHEVRON TYPE**
10	EYE BOLT	ASTM A-193 GR.B7M
11	EYE BOLT NUT	ASTM A-194 GR.2HM
12	YOKE NUT	B-148-UNS-C95600
13	HANDWHEEL	ASTM A-536 GR.65-45-12
14	HANDWHEEL NUT	ASTM A-515 GR.70
15	BONNET STUD	ASTM A-193 GR.B7M
16	BONNET NUT	ASTM A-194 GR.2HM
17	FLANGE DETECTING PAINT	H.F. ACID DETECTING PAINT
18	STUD	ASTM A-193 GR. B7M
19	NUT	ASTM A194 GR. 2HM
20	GREASE FITTING	CARBON STEEL
21	JAM NUT	CARBON STEEL

* Optional monel/graphite spiral wound gasket.
** Optional graphoil packing.

dim	Description		1/2	3/4	1	1.5	2
A	FACE TO FACE FLANGED	in	6.44	7.5	8.5	9.5	11.5
		mm	164	191	216	241	292
B	CENTER TO TOP CLOSED	in	9	9	9	12.5	12.5
		mm	229	229	229	319	319
C	CENTER TO TOP OPEN	in	10	10	10	14.5	14.5
		mm	254	254	254	370	370
D	HANDWHEEL	in	4	4.25	4.25	5.5	8
		mm	102	108	108	140	203
	WEIGHT	lbs	13	18	24	42	64
		kg	5.9	8.2	10.9	19.1	29

following Phillips recommendations

fig: GH08T-P basic valve
fig: GH08T-P-TR w/high performance seats

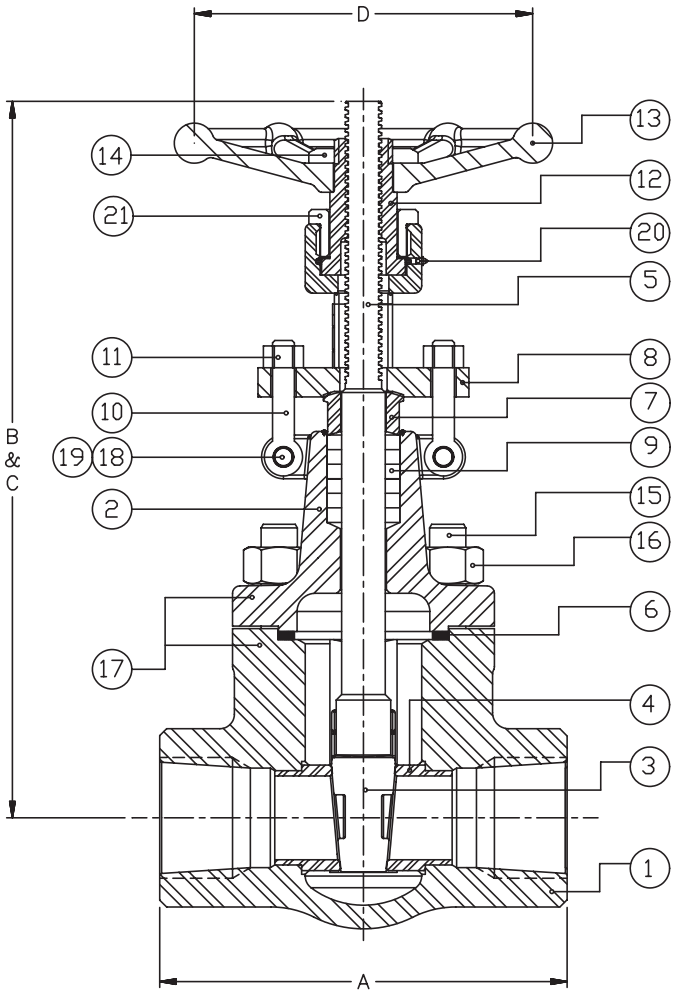

No	Description	Material Specifications
1	BODY	ASTM A-105 (1)
2	BONNET	ASTM A-105 (1)
3	DISC	MONEL (UNS N04400)
4	SEAT RING	MONEL (UNS N04400)
5	STEM	K500 (ASTM B-865 - UNS N05500)
6	BONNET GASKET SPIRAL WOUND	MONEL UNS N04400 PTFE FILLED *
7	PACKING GLAND	ASTM B-164 - UNS N04400
8	GLAND FLANGE	ASTM A-515 GR.70 or ASTM A-105
9	PACKING	PTFE-CHEVRON TYPE**
10	EYE BOLT	ASTM A-193 GR.B7M
11	EYE BOLT NUT	ASTM A-194 GR.2HM
12	YOKE NUT	B-148-UNS-C95600
13	HANDWHEEL	ASTM A-536 GR.65-45-12
14	HANDWHEEL NUT	ASTM A-515 GR.70
15	BONNET STUD	ASTM A-193 GR.B7M
16	BONNET NUT	ASTM A-194 GR 2HM
17	FLANGE DETECTING PAINT	H.F. ACID DETECTING PAINT
18	STUD	ASTM A-193 GR B7M
19	NUT	ASTM A-194 GR 2HM
20	GREASE FITTING	CARBON STEEL
21	JAM NUT	CARBON STEEL

* Optional monel/graphite spiral wound gasket.
** Optional graphoil packing.
(1) Carbon content 0.25 max.

dim	Description		1/2	3/4	1	1.5	2
A	END TO END	in	3.50	4.50	5.00	5.00	6.00
		mm	89	115	127	127	152
B	CENTER TO TOP CLOSED	in	7.25	8.00	9.00	12.00	12.0
		mm	185	204	229	305	305
C	CENTER TO TOP OPEN	in	8.00	9.00	10.00	13.5	14.00
		mm	204	229	254	343	356
D	HANDWHEEL	plg	4.00	4.00	4.00	6.00	6.00
		mm	102	102	102	152	152
	WEIGHT	lbs	5.5	7	13	22	42
		kg	2.5	3.0	5.5	10.0	19.0

H.F. acid gate valves

following Phillips recommendations

fig: GH08T-M35-P basic valve
fig: GH08T-M35-P-TR w/high performance seats

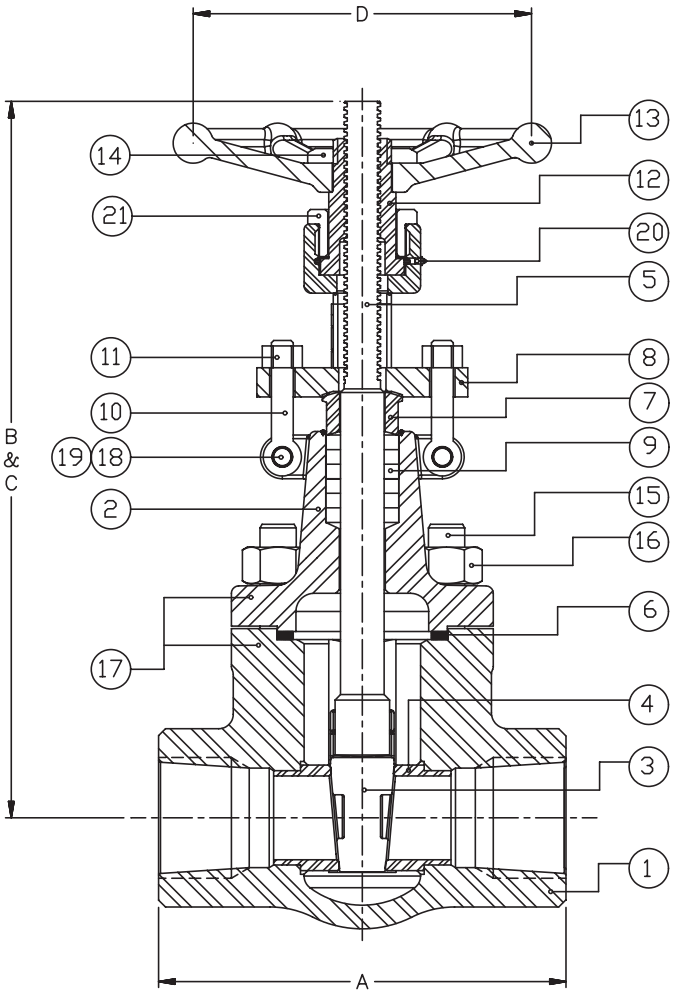

No	Description	Material Specifications
1	BODY	ASTM A-494 GR. M35-1 (UNS N04400)
2	BONNET	ASTM A-494 GR. M35-1 (UNS N04400)
3	DISC	MONEL (UNS N04400)
4	SEAT RING	MONEL (UNS N04400)
5	STEM	ASTM B-865 - UNS N05500
6	BONNET GASKET SPIRAL WOUND	MONEL UNS N04400 PTFE FILLED *
7	PACKING GLAND	ASTM B-164 - UNS N04400
8	GLAND FLANGE	ASTM A-515 GR.70 or ASTM A-105
9	PACKING	CHEVRON TYPE**
10	EYE BOLT	ASTM A-193 GR.B7M
11	EYE BOLT NUT	ASTM A-194 GR.2HM
12	YOKE NUT	B-148-UNS-C95600
13	HANDWHEEL	ASTM A-536 GR.65-45-12
14	HANDWHEEL NUT	ASTM A-515 GR.70
15	BONNET STUD	ASTM A-193 GR.B7M
16	BONNET STUD	ASTM A-194 GR.2HM
17	FLANGE DETECTING PAINT	H.F. ACID DETECTING PAINT
18	STUD	ASTM A-193 GR. B7M
19	NUT	ASTM A194 GR. 2HM
20	GREASE FITTING	CARBON STEEL
21	JAM NUT	CARBON STEEL

* Optional monel/graphite spiral wound gasket
** Optional graphoil packing.

dim	Description		1/2	3/4	1	1.5	2
A	END TO END	in	3.50	4.50	5.00	5.00	6.00
		mm	89	115	127	127	152
B	CENTER TO TOP CLOSED	in	7.25	8.00	9.00	12.00	12.0
		mm	185	204	229	305	305
C	CENTER TO TOP OPEN	in	8.00	9.00	10.00	13.5	14.00
		mm	204	229	254	343	356
D	HANDWHEEL	plg	4.00	4.00	4.00	6.00	6.00
		mm	102	102	102	152	152
	WEIGHT	lbs	5.5	7	13	22	42
		kg	2.5	3.0	5.5	10.0	19.0

following Phillips recommendations

fig: BH03R-P basic valve
fig: BH03R-P-TR w/high performance seats

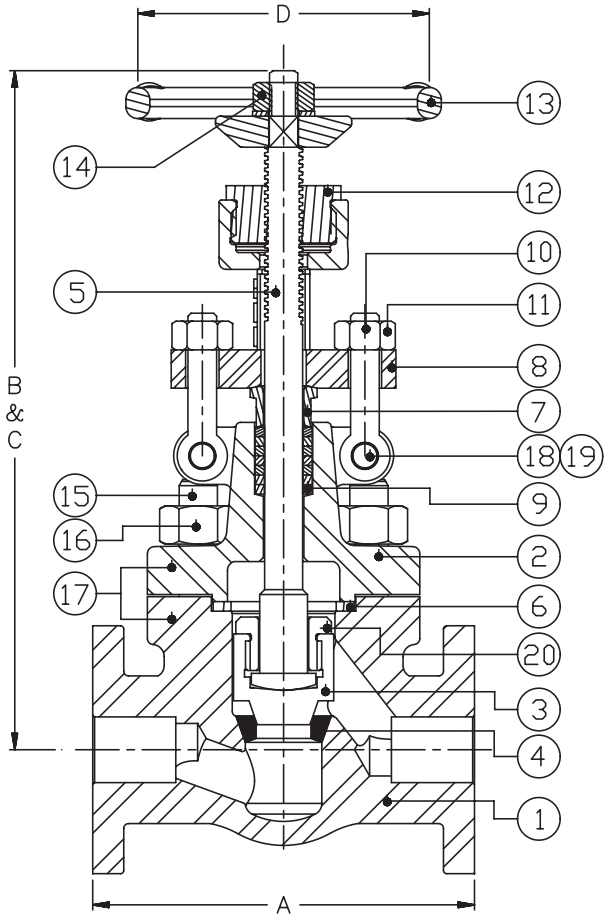

No	Description	Material Specifications
1	BODY	ASTM A-105 (1)
2	BONNET	ASTM A-105 (1)
3	DISC	MONEL (UNS N04400)
4	INTEGRAL SEAT RING	MONEL (UNS N04400)
5	STEM	K500 (ASTM B-865 - UNS N05500)
6	BONNET GASKET SPIRAL WOUND	MONEL UNS N04400 PTFE FILLED *
7	PACKING GLAND	ASTM B-164 - UNS N04400
8	GLAND FLANGE	ASTM A-515 GR.70 or ASTM A-105
9	PACKING	PTFE-CHEVRON TYPE **
10	EYE BOLT	ASTM A-193 GR.B7M
11	EYE BOLT NUTS	ASTM A-194 GR.2HM
12	YOKE NUT	B-148-UNS-C95600
13	HANDWHEEL	ASTM A-536 GR.65-45-12
14	HANDWHEEL NUT	ASTM A-194 GR.2H
15	BONNET STUD	ASTM A-193 GR.B7M
16	BONNET NUT	ASTM A-194 GR.2HM
17	FLANGE DETECTING PAINT	H.F. ACID DETECTING PAINT
18	STUD	ASTM A-193 GR. B7M
19	NUT	ASTM A-194 GR.2HM
20	DISC NUT	MONEL (UNS N04400)

* Optional monel/graphite spiral wound gasket.
** Optional graphoil packing.
(1) Carbon content 0.25%max.

dim	Description		1/2	3/4	1
A	FACE TO FACE FLANGED	in	6.0	7.0	8.0
		mm	152	178	203
B	CENTER TO TOP CLOSED	in	9.5	9.5	9.5
		mm	241	241	241
C	CENTER TO TOP OPEN	in	10.25	10.25	10.25
		mm	260	260	260
D	HANDWHEEL	in	4	4.5	4.5
		mm	102	144	114
	WEIGHT	lbs	10	15	22
		kg	4.5	6.8	10

H.F. acid globe valves

following Phillips recommendations

fig: BH03R-M35-P basic valve
fig: BH03R-M35-P-TD w/high performance seats

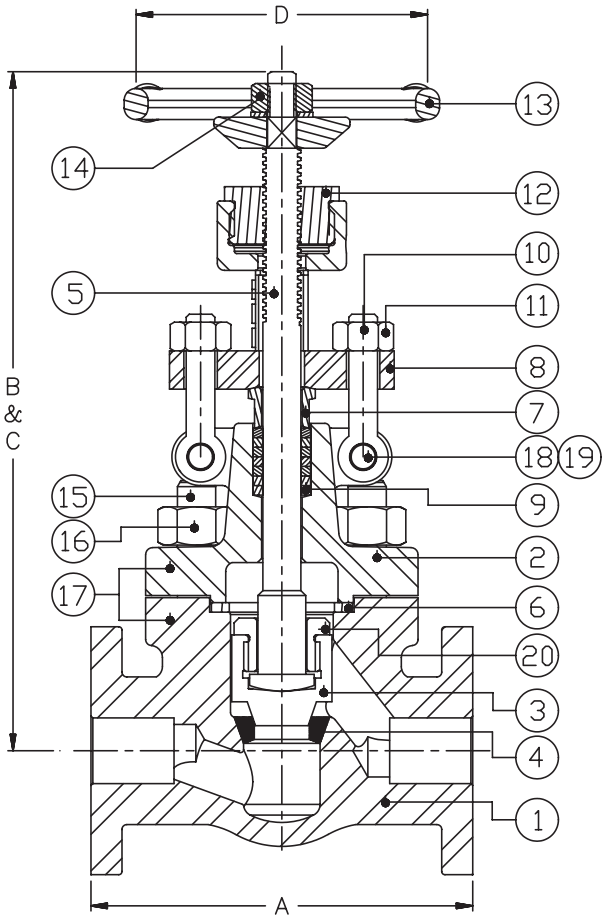

No	Description	Material Specifications
1	BODY	ASTM A-494 GR. M35-1 (UNS N04400)
2	BONNET	ASTM A-494 GR. M35-1 (UNS N04400)
3	DISC	MONEL (UNS N04400)
4	INTEGRAL SEAT RING	MONEL (UNS N04400)
5	STEM	K500 (ASTM B - 865 - UNS N05500)
6	BONNET GASKET SPIRAL WOUND	MONEL UNS N04400 PTFE FILLED *
7	PACKING GLAND	ASTM B-164 - UNS N04400
8	GLAND FLANGE	ASTM A-515 GR.70 or ASTM A-105
9	PACKING	PTFE-CHEVRON TYPE**
10	EYE BOLT	ASTM A-193 GR.B7M
11	EYE BOLT NUT	ASTM A-194 GR.2HM
12	YOKE NUT	B-148-UNS C95600
13	HANDWHEEL	ASTM A-536 GR.65-45-12
14	HANDWHEEL NUT	ASTM A-194 GR.2H
15	BONNET STUD	ASTM A-193 GR.B7M
16	BONNET NUT	ASTM A-194 GR.2HM
17	FLANGE DETECTING PAINT	H.F. ACID DETECTING PAINT
18	STUD	ASTM A-193 GR.B7M
19	NUT	ASTM A-194 GR.2HM
20	DISC NUT	MONEL (UNS N04400)

* Optional monel/graphite spiral wound gasket.
** Optional graphoil packing.

dim	Description		1/2	3/4	1
A	FACE TO FACE FLANGED	in	6.0	7.0	8.0
		mm	152	178	203
B	CENTER TO TOP CLOSED	in	9.5	9.5	9.5
		mm	241	241	241
C	CENTER TO TOP OPEN	in	10.25	10.25	10.25
		mm	260	260	260
D	HANDWHEEL	in	4	4.5	4.5
		mm	102	144	114
	WEIGHT	lbs	10	15	22
		kg	4.5	6.8	10

following Phillips recommendations

fig: BH06R-P basic valve
fig: BH06R-P-TD w/high performance seats

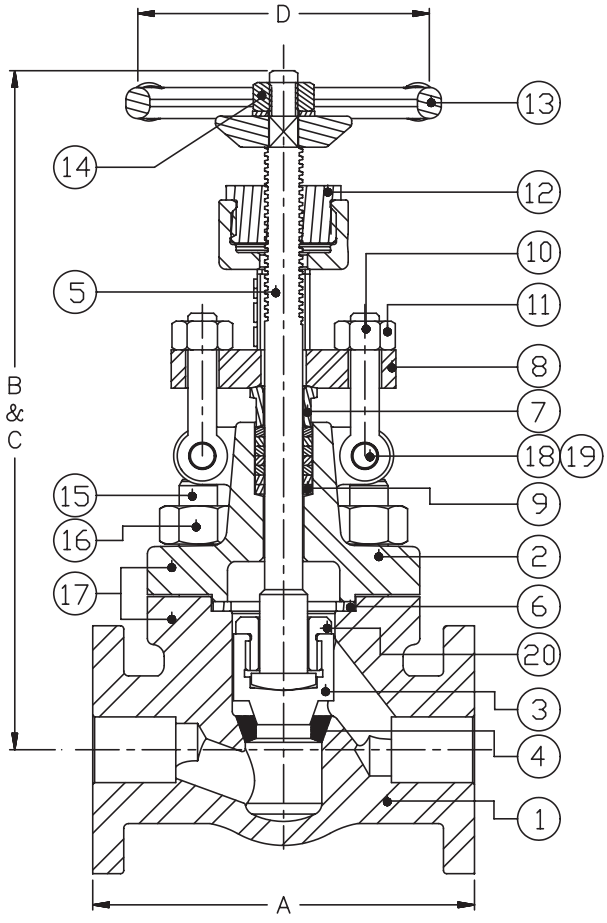

No	Description	Material Specifications
1	BODY	ASTM A-105 (1)
2	BONNET	ASTM A-105 (1)
3	DISC	MONEL (UNS N04400)
4	INTEGRAL SEAT RING	MONEL (UNS N04400)
5	STEM	K500 (ASTM B-865 - UNS N05500)
6	BONNET GASKET SPIRAL WOUND	MONEL UNS N04400 PTFE FILLED *
7	PACKING GLAND	ASTM B-164 - UNS N04400
8	GLAND FLANGE	ASTM A-515 GR.70 or ASTM A-105
9	PACKING	PTFE-CHEVRON TYPE **
10	EYE BOLT	ASTM A-193 GR.B7M
11	EYE BOLT NUTS	ASTM A-194 GR.2HM
12	YOKE NUT	B-148-UNS C95600
13	HANDWHEEL	ASTM A-536 GR.65-45-12
14	HANDWHEEL NUT	ASTM A-194 GR.2H
15	BONNET STUD	ASTM A-193 GR.B7M
16	BONNET NUT	ASTM A-194 GR.2HM
17	FLANGE DETECTING PAINT	H.F. ACID DETECTING PAINT
18	STUD	ASTM A-193 GR. B7M
19	NUT	ASTM A-194 GR.2HM
20	DISC NUT	MONEL (UNS N04400)

* Optional monel/graphite spiral wound gasket.
** Optional graphoil packing.
(1) Carbon content 0.25%max.

dim	Description		1/2	3/4	1	1 1/2	2
A	FACE TO FACE FLANGED	in	6.5	7.5	8.5	9.5	11.5
		mm	165	191	216	241	292
B	CENTER TO TOP CLOSED	in	9.5	9.5	9.5	13.65	13.65
		mm	241	241	241	347	347
C	CENTER TO TOP OPEN	in	10.25	10.25	10.25	15.83	15.83
		mm	260	260	260	402	402
D	HANDWHEEL	in	4	4.5	4.5	6	6
		mm	102	144	114	152	152
	WEIGHT	lbs	10	15	22	44	63
		kg	4.5	6.8	10	20	28.6

H.F. acid globe valves

following Phillips recommendations

fig: BH06R-M35-P basic valve
fig: BH06R-M35-P-TD w/high performance seats

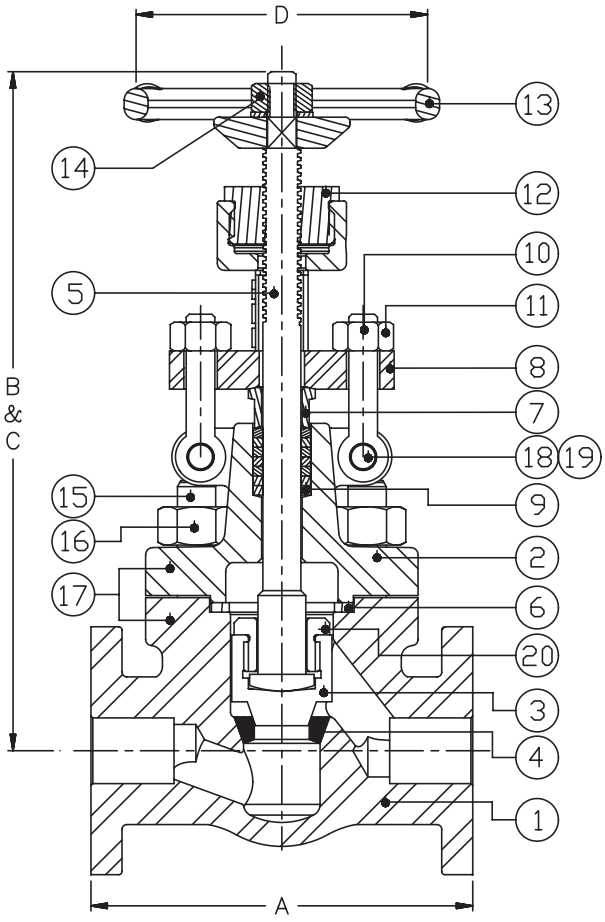

No	Description	Material Specifications
1	BODY	ASTM A-494 GR. M35-1 (UNS N04400)
2	BONNET	ASTM A-494 GR. M35-1 (UNS N04400)
3	DISC	MONEL (UNS N04400)
4	INTEGRAL SEAT RING	MONEL (UNS N04400)
5	STEM	K500 (ASTM B - 865 - UNS N05500)
6	BONNET GASKET SPIRAL WOUND	MONEL UNS N04400 PTFE FILLED *
7	PACKING GLAND	ASTM B-164 - UNS N04400
8	GLAND FLANGE	ASTM A-515 GR.70 or ASTM A-105
9	PACKING	PTFE-CHEVRON TYPE**
10	EYE BOLT	ASTM A-193 GR.B7M
11	EYE BOLT NUT	ASTM A-194 GR.2HM
12	YOKE NUT	B-148-UNS C95600
13	HANDWHEEL	ASTM A-536 GR.65-45-12
14	HANDWHEEL NUT	ASTM A-194 GR.2H
15	BONNET STUD	ASTM A-193 GR.B7M
16	BONNET NUT	ASTM A-194 GR.2HM
17	FLANGE DETECTING PAINT	H.F. ACID DETECTING PAINT
18	STUD	ASTM A-193 GR.B7M
19	NUT	ASTM A-194 GR.2HM
20	DISC NUT	MONEL (UNS N04400)

* Optional monel/graphite spiral wound gasket.
** Optional graphoil packing.

dim	Description		1/2	3/4	1	1 1/2	2
A	FACE TO FACE FLANGED	in	6.5	7.5	8.5	9.5	11.5
		mm	165	191	216	241	292
B	CENTER TO TOP CLOSED	in	9.5	9.5	9.5	13.65	13.65
		mm	241	241	241	347	347
C	CENTER TO TOP OPEN	in	10.25	10.25	10.25	15.83	15.83
		mm	260	260	260	402	402
D	HANDWHEEL	in	4	4.5	4.5	6	6
		mm	102	144	114	152	152
	WEIGHT	lbs	10	15	22	44	63
		kg	4.5	6.8	10	20	28.6

following Phillips recommendations

fig: BH08T-P basic valve
fig: BH08T-P-TD w/high performance seats

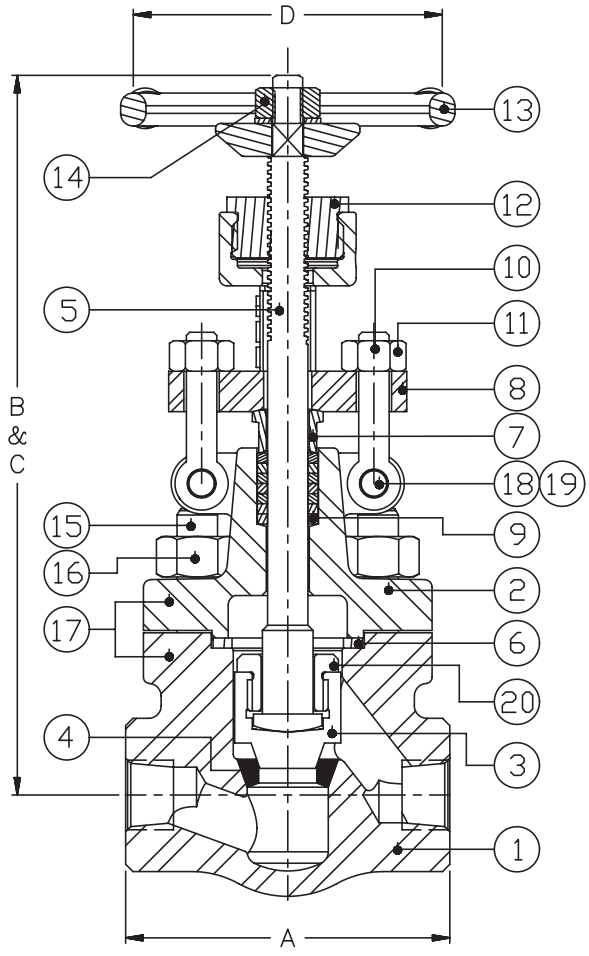

No	Description	Material Specifications
1	BODY	ASTM A-105 (1)
2	BONNET	ASTM A-105 (1)
3	DISC	MONEL (UNS N04400)
4	SEAT RING	MONEL (UNS N04400)
5	STEM	K500 (ASTM B-865 - UNS N05500)
6	BONNET GASKET SPIRAL WOUND	MONEL UNS N04400 PTFE FILLED *
7	PACKING GLAND	ASTM B-164 - UNS N04400
8	GLAND FLANGE	ASTM A-515 GR.70 or ASTM A-105
9	PACKING	PTFE-CHEVRON TYPE**
10	EYE BOLT	ASTM A-193 GR.B7M
11	EYE BOLT NUT	ASTM A-194 GR.2HM
12	YOKE NUT	B-148-UNS C95600
13	HANDWHEEL	ASTM A-536 GR.65-45-12
14	HANDWHEEL NUT	ASTM A-194 GR.2H
15	BONNET STUD	ASTM A-193 GR.B7M
16	BONNET NUT	ASTM A-194 GR.2HM
17	FLANGE DETECTING PAINT	H.F. ACID DETECTING PAINT
18	STUD	ASTM A-193 GR B7M
19	NUT	ASTM A-194 GR 2HM
20	DISC NUT	MONEL (UNS N04400)

* Optional monel/graphite spiral wound gasket.
** Optional graphoil packing.
(1) Carbon content 0.25%max.

dim	Description		1/2	3/4	1	1.5	2
A	END TO END	in	3.50	4.50	5.00	5.00	6.00
		mm	89	115	127	127	152
B	CENTER TO TOP CLOSED	in	7.25	8.00	9.00	12.00	12.0
		mm	185	204	229	305	305
C	CENTER TO TOP OPEN	in	7.75	9.00	10.00	13.2	13.75
		mm	197	227	254	335	349
D	HANDWHEEL	plg	4.00	4.00	4.00	6.00	6.00
		mm	102	102	102	152	152
	WEIGHT	lbs	5.5	7	13	22	42
		kg	2.5	3.0	5.5	10.0	19.0

H.F. acid globe valves

following Phillips recommendations

fig: BH08T-M35-P basic valve
fig: BH08T-M35-P-TD w/high performance seats

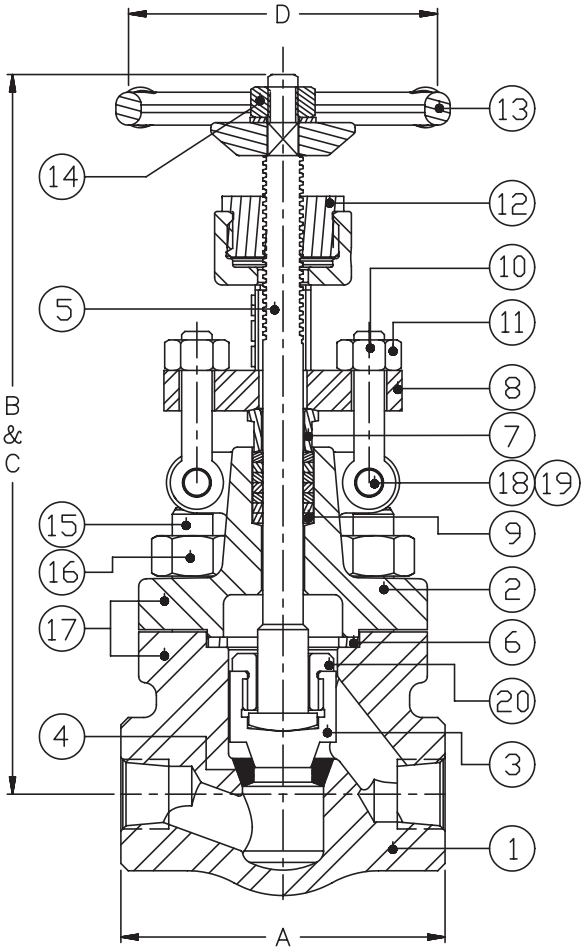

No	Description	Material Specifications
1	BODY	ASTM A-494 GR. M35-1 (UNS N04400)
2	BONNET	ASTM A-494 GR. M35-1 (UNS N04400)
3	DISC	MONEL (UNS N04400)
4	INTEGRAL SEAT RING	MONEL (UNS N04400)
5	STEM	K500 (ASTM B - 865 - UNS N05500)
6	BONNET GASKET SPIRAL WOUND	MONEL UNS N04400 PTFE FILLED *
7	PACKING GLAND	ASTM B-164 - UNS N04400
8	GLAND FLANGE	ASTM A-515 GR.70 or ASTM A-105
9	PACKING	PTFE-CHEVRON TYPE**
10	EYE BOLT	ASTM A-193 GR.B7M
11	EYE BOLT NUT	ASTM A-194 GR.2HM
12	YOKE NUT	B-148-UNS C95600
13	HANDWHEEL	ASTM A-536 GR.65-45-12
14	HANDWHEEL NUT	ASTM A-194 GR.2H
15	BONNET STUD	ASTM A-193 GR.B7M
16	BONNET NUT	ASTM A-194 GR.2HM
17	FLANGE DETECTING PAINT	H.F. ACID DETECTING PAINT
18	STUD	ASTM A-193 GR.B7M
19	NUT	ASTM A-194 GR.2HM
20	DISC NUT	MONEL (UNS N04400)

* Optional monel/graphite spiral wound.
** Optional graphoil packing.

dim	Description		1/2	3/4	1	1.5	2
A	END TO END	in	3.50	4.50	5.00	5.00	6.00
		mm	89	115	127	127	152
B	CENTER TO TOP CLOSED	in	7.25	8.00	9.00	12.00	12.0
		mm	185	204	229	305	305
C	CENTER TO TOP OPEN	in	7.75	9.00	10.00	13.2	13.75
		mm	197	227	254	335	349
D	HANDWHEEL	plg	4.00	4.00	4.00	6.00	6.00
		mm	102	102	102	152	152
	WEIGHT	lbs	5.5	7	13	22	42
		kg	2.5	3.0	5.5	10.0	19.0

following Phillips recommendations

fig: LH03R-P

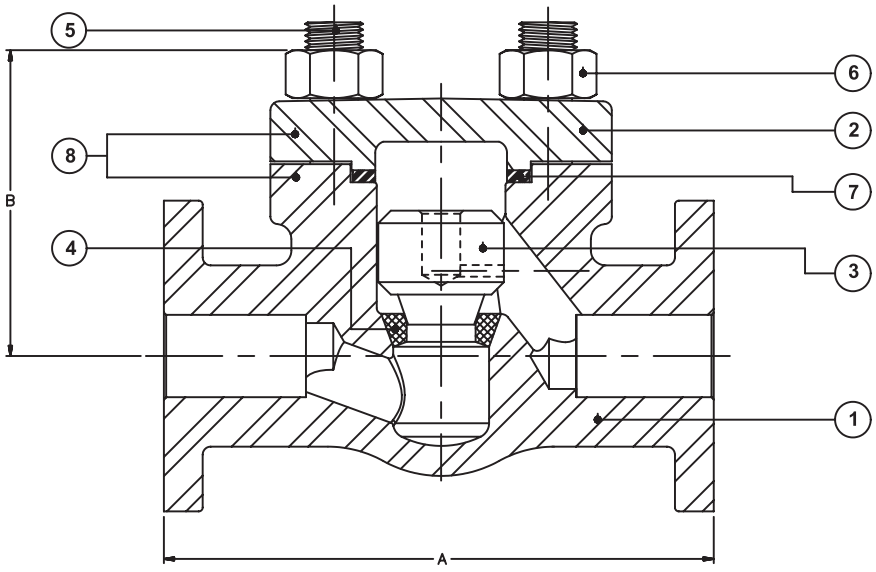

No	Description	Material Specifications
1	BODY	ASTM A-105 (1)
2	COVER	ASTM A-105 (1)
3	DISC	MONEL (UNS N04400)
4	INTEGRAL SEAT RING	MONEL (UNS N04400)
5	COVER CAP STUD	ASTM A-193 GR B7M
6	COVER CAP NUT	ASTM A-194-2HM
7	BONNET GASKET SPIRAL WOUND	MONEL UNS N04400 PTFE FILLED*
8	FLANGE DETECTING PAINT	H.F. ACID DETECTING PAINT

* Optional monel/graphite spiral wound gasket.
(1) Carbon content 0.25% max.

dim	Description		1/2	3/4	1
A	FACE TO FACE FLANGED	in	6.0	7.0	8.0
		mm	152.4	177.8	203.2
B	CENTER TO TOP	in	2.5	3.0	3.38
		mm	66	80	90
	WEIGHT FLANGED ENDS	lbs	7	12	16
		kg	3.18	5.4	7.3

H.F. acid check valves

following Phillips recommendations

fig: LH03R-M35-P

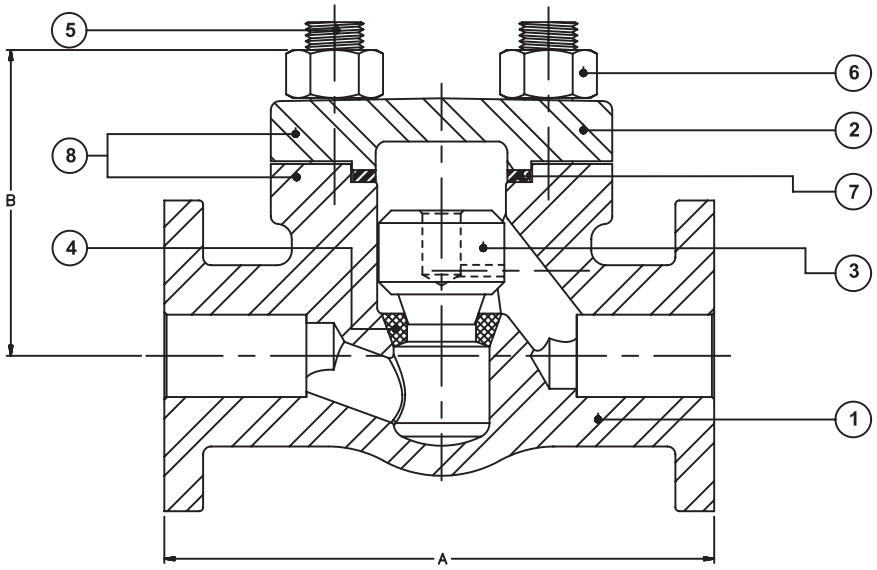

No	Description	Material Specifications
1	BODY	ASTM A-494 GR M35-1(UNS N044000)
2	COVER	ASTM A-494 GR M35-1(UNS N044000)
3	DISC	MONEL (UNS N04400)
4	INTEGRAL SEAT RING	MONEL (UNS N04400)
5	COVER CAP STUD	ASTM A-193 GR B7M
6	COVER CAP NUT	ASTM A-194-2HM
7	BONNET GASKET SPIRAL WOUND	MONEL UNS N04400 PTFE FILLED*
8	FLANGE DETECTING PAINT	H.F. ACID DETECTING PAINT

* Optional monel/graphite spiral wound gasket.

dim	Description		1/2	3/4	1
A	FACE TO FACE FLANGED	in	6.0	7.0	8.0
		mm	152.4	178.8	203.2
B	CENTER TO TOP	in	2.5	3.0	3.38
		mm	64	76	87
	WEIGHT FLANGED ENDS	lbs	7	12	16
		kg	3.18	5.4	7.3

following Phillips recommendations

fig: LH06R-M35-P

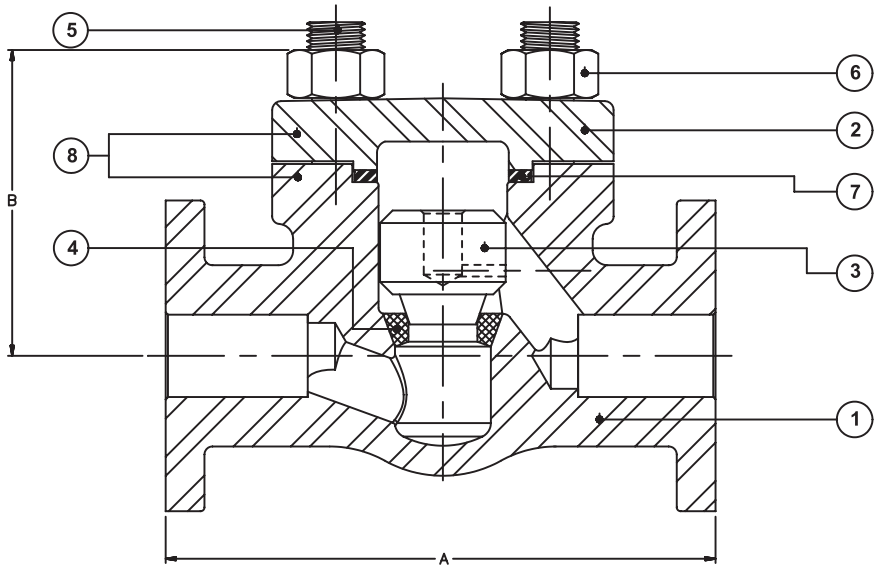

No	Description	Material Specifications
1	BODY	ASTM A-105 (1)
2	COVER	ASTM A-105 (1)
3	DISC	MONEL (UNS N04400)
4	INTEGRAL SEAT RING	MONEL (UNS N04400)
5	COVER CAP STUD	ASTM A-193 GR B7M
6	COVER CAP NUT	ASTM A-194-2HM
7	BONNET GASKETS PIRAL WOUND	MONEL UNS N04400 PTFE FILLED*
8	FLANGE DETECTING PAINT	H.F. ACID DETECTING PAINT

* Optional monel/graphite spiral wound gasket.
(1) Carbon content 0.25% max.

dim	Description		1/2	3/4	1
A	FACE TO FACE FLANGED	in	6.5	7.5	8.5
		mm	165	191	216
B	CENTER TO TOP	in	2.6	3.15	3.55
		mm	66	80	90
	WEIGHT FLANGED ENDS	lbs	8	14	19
		kg	3.6	6.4	8.6

H.F. acid check valves

following Phillips recommendations

fig: LH06R-M35-P

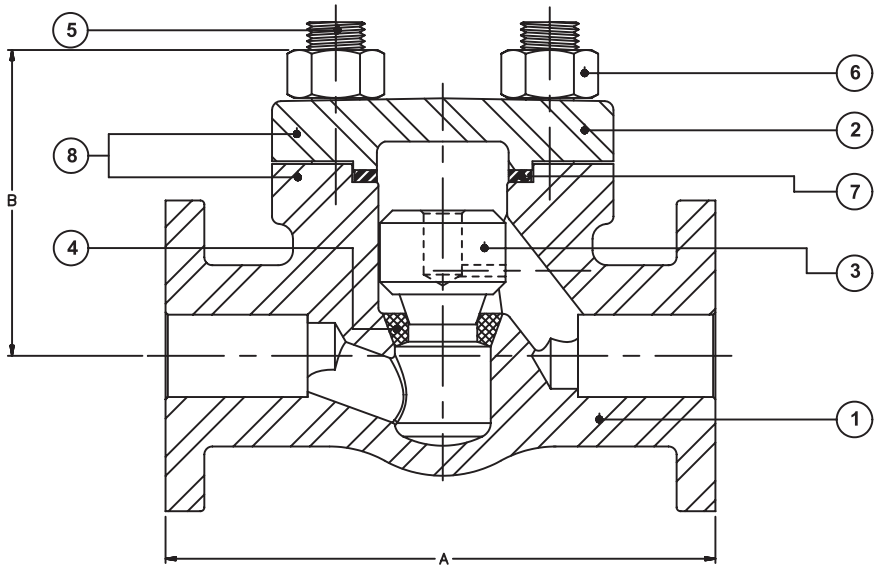

No	Description	Material Specifications
1	BODY	ASTM A-494 GR M35-1(UNS N044000)
2	COVER	ASTM A-494 GR M35-1(UNS N044000)
3	DISC	MONEL (UNS N04400)
4	INTEGRAL SEAT RING	MONEL (UNS N04400)
5	COVER CAP STUD	ASTM A-193 GR B7M
6	COVER CAP NUT	ASTM A-194-2HM
7	BONNET GASKET SPIRAL WOUND	MONEL UNS N04400 PTFE FILLED*
8	FLANGE DETECTING PAINT	H.F. ACID DETECTING PAINT

* Optional monel/graphite spiral wound gasket.

dim	Description		1/2	3/4	1
A	FACE TO FACE FLANGED	in	6.5	7.5	8.5
		mm	165	191	216
B	CENTER TO TOP	in	2.6	3.15	3.55
		mm	66	80	90
	WEIGHT FLANGED ENDS	lbs	8	14	19
		kg	3.6	6.4	8.6

following Phillips recommendations

fig: LH08T-P

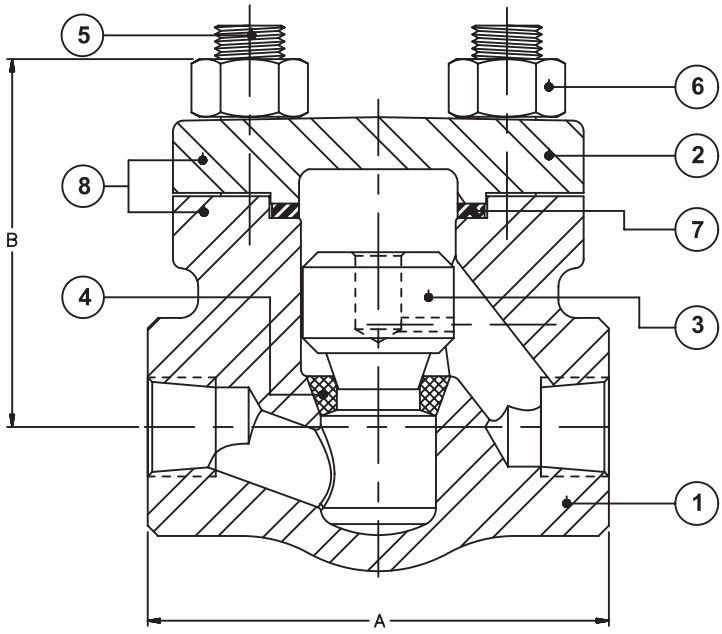

No	Description	Material Specifications
1	BODY THREADED ENDS	ASTM A-105 (1)
2	COVER	ASTM A-105 (1)
3	DISC	MONEL (UNS N04400)
4	INTEGRAL SEAT RING	MONEL (UNS N04400)
5	COVER CAP STUD	ASTM A-193 GR.B7M
6	COVER CAP NUT	ASTM A-194-GR .2HM
7	BONNET GASKET SPIRAL WOUND	MONEL UNS N04400 PTFE FILLED *
8	FLANGE DETECTING PAINT	H.F. ACID DETECTING PAINT

* Optional monel/graphite spiral wound gasket.
(1) Carbon content 0.25% max.

dim	Description		1/2	3/4	1	1.5	2
A	END TO END	in	3.50	4.5	5.00	5.00	6.00
		mm	89	115	127	127	152
B	CENTER TO TOP	in	2.5	3.0	3.38	5.5	5.0
		mm	64	76	87	127	127
	WEIGHT THREADED ENDS	lbs	3	6	9	20	35
		kg	1.4	2.7	4.1	9.1	15.9

H.F. acid check valves

following Phillips recommendations

fig: LH08T-M35-P

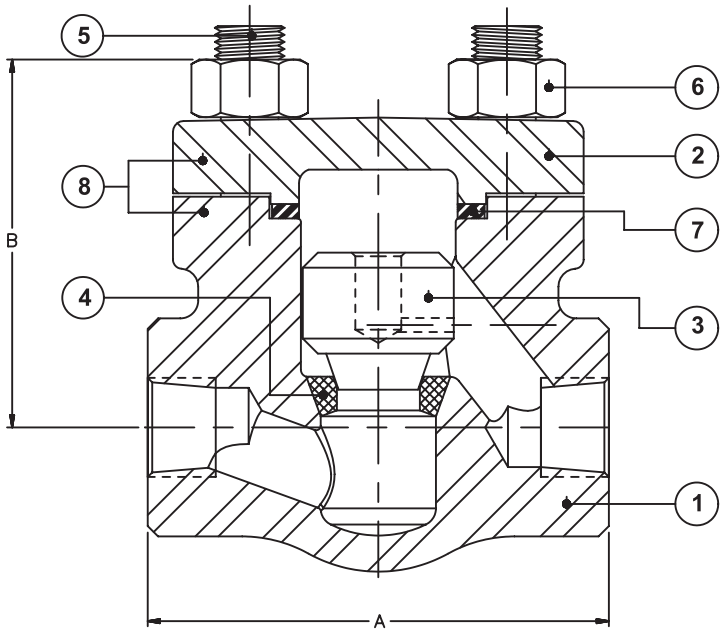

No	Description	Material Specifications
1	BODY THREADED ENDS	ASTM A-494 GR. M35-1 (UNS N04400)
2	COVER	ASTM A-494 GR. M35-1 (UNS N04400)
3	DISC	MONEL (UNS N04400)
4	INTEGRAL SEAT RING	MONEL (UNS N04400)
5	COVER CAP STUD	ASTM A-193 GR.B7M
6	COVER CAP NUT	ASTM A-194 GR.2HM
7	BONNET GASKET SPIRAL WOUND	MONEL UNS N04400 PTFE FILLED *
8	FLANGE DETECTING PAINT	H.F. ACID DETECTING PAINT

* Optional monel/graphite spiral wound gasket.

dim	Description		1/2	3/4	1	1.5	2
A	END TO END	in	3.50	4.5	5.00	5.00	6.00
		mm	89	115	127	127	152
B	CENTER TO TOP	in	2.5	3.0	3.38	5.5	5.0
		mm	64	76	87	127	127
	WEIGHT THREADED ENDS	lbs	3	6	9	20	35
		kg	1.4	2.7	4.1	9.1	15.9

following Phillips recommendations

fig: GH03R-P basic valve
fig: GH03R-P-TD w/high performance seats

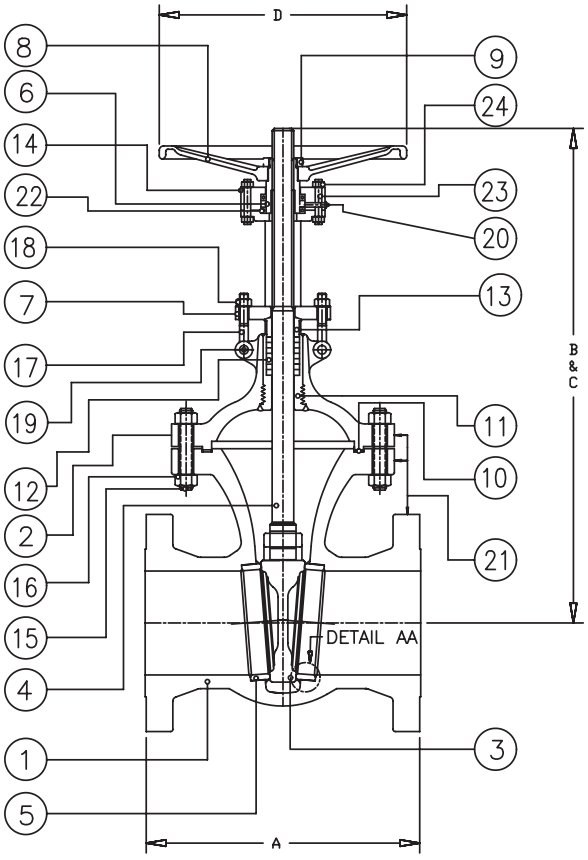

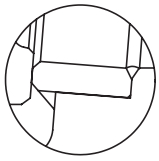

DETAIL AA

FULL DOUBLE SEAL WELDED SEAT RING FROM 3" AND UP

No	Description	Material Specifications
1	BODY	ASTM A-216 GR.WCB (1)
2	BONNET	ASTM A-216 GR.WCB (1)
3	WEDGE	ASTM A-494 GR.M35-1 (UNS N04400)
4	STEM	K500 (ASTM B-865 - UNS N05500)
5	SEAT RING (2)	ASTM A-494 GR.M35-1 (UNS N04400)
6	YOKE NUT	ASTM B-148 C95600
7	GLAND FLANGE	ASTM A-515 GR.70
8	HANDWHEEL	ASTM A-536 GR.65-45-12
9	HANDWHEEL NUT	ASTM A-515 GR.70
10	BONNET GASKET SPIRAL WOUND	MONEL (UNS N04400/PTFE FILLED) *
11	BONNET SLEEVE	ASTM B-164 - UNS N04400
12	PACKING	JOHN CRANE 124 **
13	PACKING GLAND	ASTM B-164 - UNS N04400
14	BEARING CAP	ASTM A-515 GR.70
15	BONNET STUD	ASTM A-193 GR.B7M
16	BONNET STUD NUT	ASTM A-194 GR.2HM
17	EYEBOLT	ASTM A-193 GR.B7M
18	EYEBOLT NUT	ASTM A-194 GR.2HM
19	EYEBOLT PIN STUD	ASTM A-193 GR.B7M
20	GREASE FITTING	STEEL
21	FLANGE DETECTING PAINT	H.F. ACID DETECTING PAINT
22	BEARINGS	ALLOY STEEL
23	BEARING CAP STUD	ASTM A-193 GR.B7
24	BEARING CAP STUD NUT	ASTM A-194 GR.2H

(1) Carbon content 0.25% max.
(2) Full Double seal welded seat ring from 3" and up.
* Optional monel/graphite spiral wound gasket.
** Optional graphoil packing.

dim	Description		1 1/2	2	3	4	6	8	10	12	14	16	18	20	24	30	36
A	FACE TO FACE FLANGED	in	7.5	8.5	11.13	12.0	15.88	16.5	18.0	19.75	30.0	33.0	36.0	39.0	45.0	55.0	68.0
		mm	191	216	283	305	403	419	457	502	762	838	914	991	1143	1397	1727
B	CENTER TO TOP CLOSED	in	14.25	14.25	17.50	21.38	28.50	28.50	39.62	46.75	53.62	57.38	66.50	72.0	85.0	118.0	121.0
		mm	362	362	445	543	724	724	1006	1187	1362	1457	1689	2007	2159	2997	3073
C	CENTER TO TOP OPEN	in	17.25	17.25	20.75	23.38	35.0	35.0	50.25	59.62	67.62	73.75	84.75	90.25	109.75	148.0	156.0
		mm	438	438	527	594	889	889	1276	1514	1718	1873	2153	2292	2788	3759	3962
D	HANDWHEEL	in	8.25	8.25	10.25	10.25	14.25	14.25	20.25	20.25	24.25	24.25	30.25	30.25	36.25	36.25	36.25
		mm	209	209	260	260	362	362	514	514	616	616	768	768	921	921	921
	WEIGHT FLANGED ENDS	lbs	49	49	86	174	287	406	642	860	1334	2436	2977	3312	3881	9526	1349
		kg	22	22	39	79	130	184	291	390	605	1105	1350	1502	1760	4320	6120

H.F. acid gate valves

following Phillips recommendations

fig: GH03R-M35-P basic valve
fig: GH03R-M35-P-TD w/high performance seats

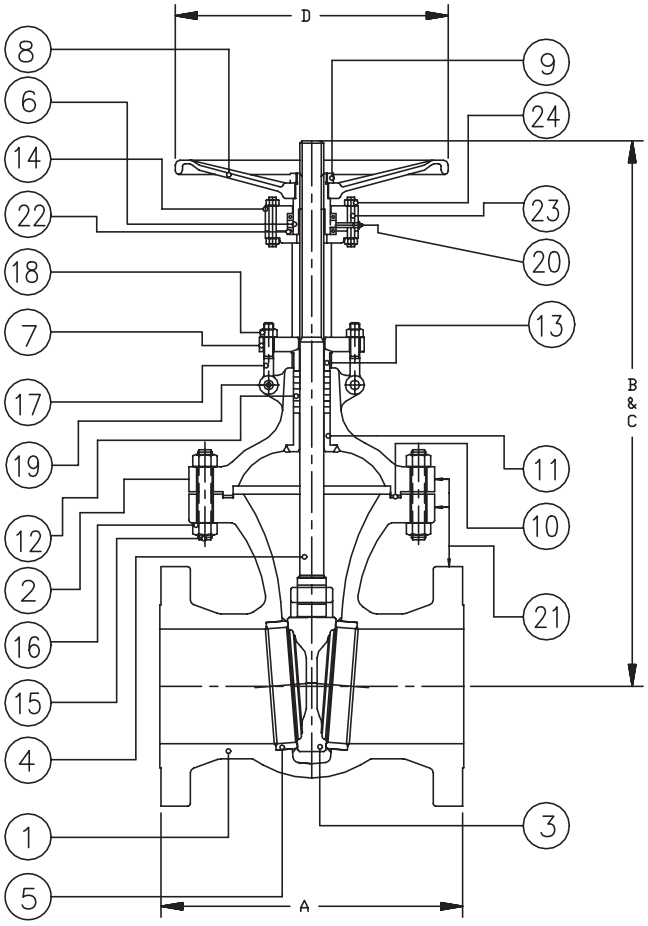

No	Description	Material Specifications
1	BODY	ASTM A-494 GR.M35-1 (UNS N04400)
2	BONNET	ASTM A-494 GR.M35-1 (UNS N04400)
3	WEDGE	ASTM A-494 GR.M35-1 (UNS N04400)
4	STEM	K500 (ASTM B865 - UNS N05500)
5	SEAT RING	ASTM A-494 GR.M35-1 (UNS N04400)
6	YOKE NUT	ASTM B-148-C95600
7	GLAND FLANGE	ASTM A-515 GR.70
8	HANDWHEEL	ASTM A-536 GR.65-45-12
9	HANDWHEEL NUT	ASTM A-515 GR.70
10	BONNET GASKET SPIRAL WOUND	MONEL (UNS N04400/PTFE FILLED) *
11	INTEGRAL BONNET BUSHING	ASTM B-164 - UNS N04400
12	PACKING	JOHN CRANE 124 **
13	PACKING GLAND	ASTM B-164 - UNS N04400
14	BEARING CAP	ASTM A-515 GR.70
15	BONNET STUD	ASTM A-193 GR.B7M
16	BONNET STUD NUT	ASTM A-194 GR.2HM
17	EYEBOLT	ASTM A-193 GR.B7M
18	EYEBOLT NUT	ASTM A-194 GR.2HM
19	EYEBOLT PIN STUD	ASTM A-193 GR.B7M
20	GREASE FITTING	STEEL
21	FLANGE DETECTING PAINT	H.F. ACID DETECTING PAINT
22	BEARINGS	ALLOY STEEL
23	BEARING CAP STUD	ASTM A-193 GR.B7
24	BEARING CAP STUD NUT	ASTM A-194 GR.2H

* Optional monel/graphite spiral wound gasket.
** Optional graphoil packing.

dim	Description		1 1/2	2	3	4	6	8	10	12
A	FACE TO FACE FLANGED	in	7.5	8.5	11.13	12.0	15.88	16.5	18.0	19.75
		mm	191	216	283	305	403	419	457	502
B	CENTER TO TOP CLOSED	in	14.25	14.25	17.50	21.38	28.50	34.25	39.62	46.75
		mm	362	362	445	543	724	870	1006	1187
C	CENTER TO TOP OPEN	in	17.25	17.25	20.75	23.38	35.0	42.8	50.25	59.62
		mm	438	438	527	594	889	1087	1276	1514
D	HANDWHEEL	in	8.25	8.25	10.25	10.25	14.25	20.25	20.25	20.25
		mm	209	209	260	260	362	514	514	514
	WEIGHT FLANGED ENDS	lbs	49	49	86	174	287	406	642	860
		kg	22	22	39	79	130	184	291	390

following Phillips recommendations

fig: BH03R-P basic valve
fig: BH03R-P-TD w/high performance seats

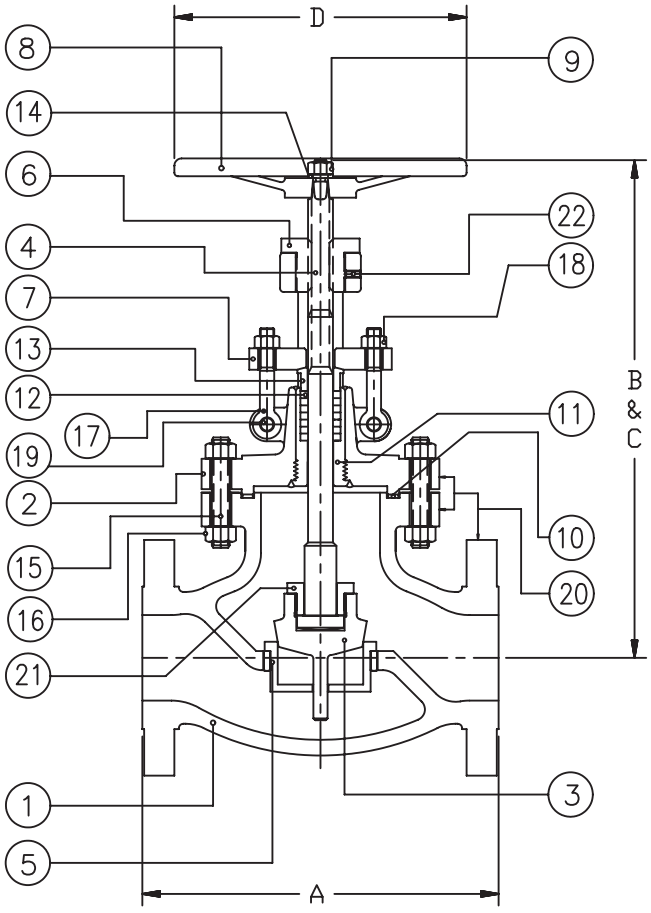

No	Description	Material Specifications
1	BODY	ASTM A-216 GR.WCB (1)
2	BONNET	ASTM A-216 GR.WCB (1)
3	DISC	ASTM A-494 GR.M35-1 (UNS N04400)
4	STEM	K500 (ASTM B-164 - UNS N04400)
5	SEAT RING (2)	ASTM A-494 GR.M35-1 (UNS N04400)
6	YOKE NUT	ASTM B-148-C95600
7	GLAND FLANGE	ASTM A-515 GR.70
8	HANDWHEEL	ASTM A-536 GR.65-45-12
9	HANDWHEEL NUT	ASTM A-515 GR.70
10	BONNET GASKET SPIRAL WOUND	MONEL (UNS N04400/PTFE FILLED) *
11	BONNET SLEEVE	ASTM B-164 - UNS N04400
12	PACKING	JOHN CRANE 124 **
13	PACKING GLAND	ASTM B-164 - UNS N04400
14	HADWHEEL NUT WASHER	11-13 CR.
15	BONNET STUD	ASTM A-193 GR.B7M
16	BONNET STUD NUT	ASTM A-194 GR.2HM
17	EYEBOLT	ASTM A-193 GR.B7M
18	EYEBOLT NUT	ASTM A-194 GR.2HM
19	EYEBOLT PIN STUD	ASTM A-193 GR.B7M
20	FLANGE PAINT	H.F. ACID DETECTING PAINT
21	DISC NUT	ASTM B-164-UNS - N04400
22	SET SCREW	ASTM A-193 GR.B7

(1) Carbon content 0.25% max.
(2) Full Double seal welded seat ring from 3"and up.
* Optional monel/graphite spiral wound gasket.
** Optional graphoil packing.

dim	Description		1 1/2	2	3	4	6	8	10	12
A	FACE TO FACE FLANGED	in	9.0	10.50	12.50	14.00	17.50	22.00	24.5	28.0
		mm	229	267	318	356	445	559	622	711
B	CENTER TO TOP CLOSED	in	14.56	14.56	17.50	19.94	25.12	27.81	38.12	40.25
		mm	370	370	445	506	638	706	968	1022
C	CENTER TO TOP OPEN	in	15.19	15.19	18.50	21.25	26.88	31.62	39.62	44.38
		mm	386	386	470	540	683	803	1006	1127
D	HANDWHEEL	in	10.25	10.25	10.25	14.25	20.25	24.25	30.25	30.25
		mm	260	260	260	362	514	616	768	768
	WEIGHT FLANGED ENDS	lbs	70	73	132	194	375	635	1058	1740
		kg	32	33	60	88	170	288	480	789

H.F. acid globe valves

following Phillips recommendations

fig: BH03R-M35-P basic valve
fig: BH03R-M35-P-TD w/high performance seats

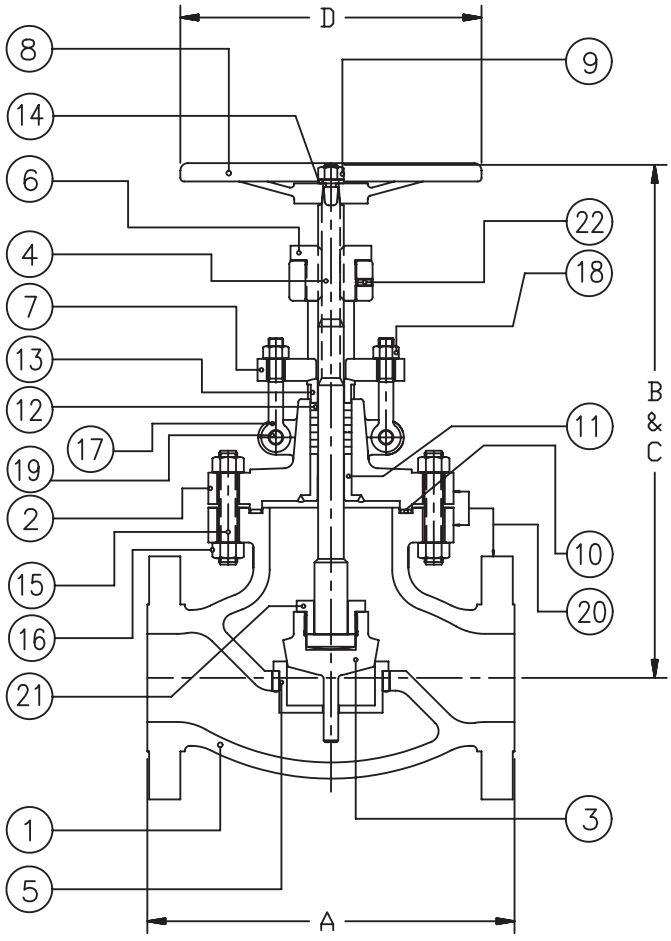

No	Description	Material Specifications
1	BODY	ASTM A-494 GR.M35-1 (UNS N04400)
2	BONNET	ASTM A-494 GR.M35-1 (UNS N04400)
3	DISC	ASTM A-494 GR.M35-1 (UNS N04400)
4	STEM	K500 (ASTM B865 UNS N05500)
5	SEAT RING (1)	ASTM A-494 GR.M35-1 (UNS N04400)
6	YOKE NUT	ASTM B-148 C95600
7	GLAND FLANGE	ASTM A-515 GR.70
8	HANDWHEEL	ASTM A-536 GR.65-45-12
9	HANDWHEEL NUT	ASTM A-194 GR.2H
10	BONNET GASKET SPIRAL WOUND	MONEL (UNS N04400/PTFE FILLED) *
11	BONNET BUSHING	ASTM A-494 GR.M35-1 (UNS N04400)
12	PACKING	JOHN CRANE 124 **
13	PACKING GLAND	ASTM B-164 - UNS N04400
14	HADWHEEL NUT WASHER	11-13 CR.
15	BONNET STUD	ASTM A-193 GR.B7M
16	BONNET STUD NUT	ASTM A-194 GR.2HM
17	EYEBOLT	ASTM A-193 GR.B7M
18	EYEBOLT NUT	ASTM A-194 GR.2HM
19	EYEBOLT PIN STUD	ASTM A-193 GR.B7M
20	FLANGE PAINT	H.F. ACID DETECTING PAINT
21	DISC NUT	ASTM B-164-UNS - N04400
22	SET SCREW	ASTM A-193 GR.B7

* Optional monel/graphite spiral wound gasket.
** Optional graphoil packing.

dim	Description		1 1/2	2	3	4	6	8	10	12
A	FACE TO FACE FLANGED	in	9.00	10.50	12.50	14.00	17.50	22.00	24.50	28.00
		mm	229	267	318	356	445	559	662	711
B	CENTER TO TOP CLOSED	in	14.59	14.56	17.50	19.94	25.12	27.81	36.12	40.25
		mm	370	370	445	506	638	706	968	1022
C	CENTER TO TOP OPEN	in	15.19	15.19	18.50	21.25	26.88	31.62	39.62	44.38
		mm	386	386	470	540	683	803	1006	1127
D	HANDWHEEL	in	10.25	10.25	10.25	14.25	20.25	24.25	30.25	30.25
		mm	260	260	260	362	514	616	768	768
	WEIGHT FLANGED ENDS	lbs	70	73	132	194	375	635	1058	1740
		kg	32	33	60	88	170	288	480	789

following Phillips recommendations

fig: WH03R-P

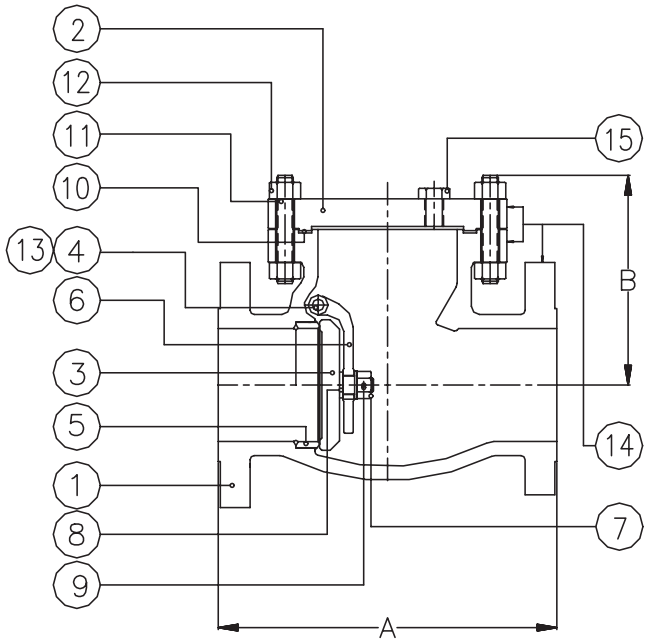

No	Description	Material Specifications
1	BODY	ASTM A-216 GR.WCB (1)
2	COVER	ASTM A-216 GR.WCB (1)
3	DISC	ASTM A-494 GR.M35-1 (UNS N04400)
4	HINGE PIN	ASTM B-164 - UNS N04400
5	SEAT RING (2)	ASTM A-494 GR.M35-1 (UNS N04400)
6	HINGE	ASTM A-494 GR.M35-1 (UNS N04400)
7	DISC NUT	ASTM B-164 - UNS N04400
8	DISC NUT WASHER	MONEL-UNS N04400
9	DISC NUT PIN	ASTM B-164 - UNS N04400
10	COVER GASKET SPIRAL WOUND	MONEL (UNS N04400/PTFE FILLED) *
11	COVER STUD	ASTM A-193 GR.B7M
12	COVER STUD NUT	ASTM A-194 GR.2HM
13	SIDE PLUG	ASTM A-105
14	FLANGE PAINT	H.F. ACID DETECTING PAINT
15	PIPE PLUG	ASTM A-105 (1)

* Optional monel/graphite spiral wound gasket.
(1) Carbon content 0.25% max.
(2) Full Double seal welded seat ring from 3" and up.

dim	Description		1 1/2	2	3	4	6	8	10	12	14	16	18	20	24	30
A	FACE TO FACE FLANGED	in	9.5	10.5	12.5	14.0	17.5	21.0	24.5	28.0	33.0	34.0	38.5	40.0	53.0	62.75
		mm	241	267	318	356	445	533	622	711	838	864	978	1015	1346	1594
B	CENTER TO TOP	in	6.375	6.375	7.625	9.875	11.0	13.5	14.5	16.75	17.5	20.5	24.62	27.87	31.50	38.25
		mm	162	162	194	25	279	343	368	425	445	521	625	708	300	972
	WEIGHT FLANGED ENDS	lbs	50	62	95	152	295	445	659	732	1018	1969	2428	3319	5689	6604
		kg	23	28	43	69	134	202	299	332	462	813	1101	1505	2580	2995

H.F. acid check valves

following Phillips recommendations

fig: WH03R-M35-P

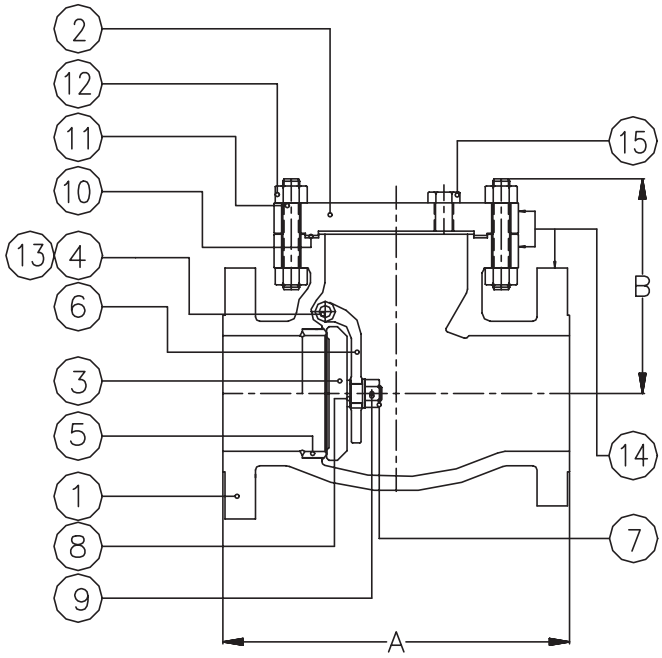

No	Description	Material Specifications
1	BODY	ASTM A-494 GR.M35-1 (UNS N04400)
2	COVER	ASTM A-494 GR.M35-1 (UNS N04400)
3	DISC	ASTM A-494 GR.M35-1 (UNS N04400)
4	HINGE PIN	ASTM B-164 - UNS N04400
5	SEAT RING (1)	ASTM A-494 GR.M35-1 (UNS N04400)
6	HINGE	ASTM A-494 GR.M35-1 (UNS N04400)
7	DISC NUT	ASTM B-164 - UNS N04400
8	DISC NUT WASHER	MONEL-UNS N04400
9	DISC NUT PIN	ASTM B-164 - UNS N04400
10	COVER GASKET SPIRAL WOUND	MONEL (UNS N04400/PTFE FILLED) *
11	COVER STUD	ASTM A-193 GR.B7M
12	COVER STUD NUT	ASTM A-194 GR.2HM
13	SIDE PLUG	MONEL UNS N04400
14	FLANGE PAINT	H.F. ACID DETECTING PAINT
15	PIPE PLUG	ASTM B-164 - UNS N04400

Optional monel/graphite spiral wound gasket
(1) Full Double seal welded seat ring.

dim	Description		1 1/2	2	3	4	6	8	10	12
A	FACE TO FACE FLANGED	in	9.5	10.5	12.5	14.0	17.5	21.0	24.5	28.0
		mm	241	267	318	356	445	533	622	711
B	CENTER TO TOP	in	6.375	6.375	7.625	9.875	11.0	13.5	14.5	16.75
		mm	162	162	194	25	279	343	368	425
	WEIGHT FLANGED ENDS	lbs	50	62	95	152	295	445	659	732
		kg	23	28	43	69	134	202	299	332

how to order
H.F. Acid Valves

FIGURE NUMBER SYSTEM

EASY WAY TO ORDER AND SPECIFY

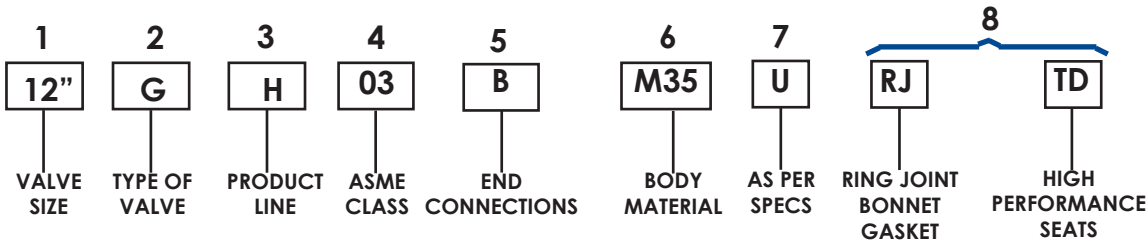

1. - Valve size

{1/2"} {3"} {12"} {24"}
{3/4"} {4"} {14"} {30"}
{1"} {6"} {16"} {36"}

{1 1/2"} {8"} {18"}
{2"} {10"} {20"}

2. - Valve Type

{G} Gate
{B} Globe
{W} Swing Check
{S} Stop Check
{L} Lift Check

3. - Product Line

{H} H.F. Acid service valves

4. - ASME Class

{01} 150
{03} 300
{06} 600
{08} 800
{} other

5. - End Connections

{R} Flanged Raised Face
{J} Flanged Ring Type Joint
{B} Butt Weld Ends
{W} Socket weld Ends
{T} Threaded Ends
{S} Socket Weld X Threaded
{H} Treaded X Socket Weld
{M} Flanged Flat Face

6. - Body material

{CBM} ASTM A216 WCB Modified % C = 0.25 max.
If not sown in figure number, this material will be by default
in API 600 type valves

{105} ASTM A105 with % C = 0.25 max.
If not sown in figure number, this material will be by default
in API 602 type valves

{M35} ASTM A494 Gr M35 - 1
All Monel valves.

7. - As per Specs

{U} Following UOP recommendations
{P} Following Phillips recommendations

8. - Other requirements

{RJ} Ring Type Joint Bonnet Gasket

{YC} Grease injector in packing chamber

{TD} High Performance Seats, PTFE insert on disc.
For API 600 type valves, Gates & Globes.
High Performance Seats, PTFE insert on disc
for API 602 globe valves only.

{TR} High Performance Seats, PTFE insert on seat
For API 602 type valves, Gate valves only

{YB} Grease injector in Body Seat.

xanor de méxico
limited warranty

Xanor de Mexico S.A. de C.V. ("*Xanor*") manufacturer of **xanik®** Valves (the "Product"), warrants to the buyer that each Product sold by it shall be free of defects in material and workmanship for a period of 18 (eighteen) months after shipment or 12 (twelve) months after instalation, whichever occurs first.

This limited warranty shall apply only if the Product is properly maintained and used in service which is normal to the particular Product, in accordance with **Xanor** Product's manuals and instructions.

Xanor makes no warranty whatsoever as to (1) integral parts, components or accessories not manufactured by **Xanor**, but instead, the applicable warranties, if any, of the respective manufacturers thereof shall apply, (2) any Product (or part thereof) damaged by misuse, neglect or accident, (3) any Product (or part thereof) shall have been repaired, altered or assembled in any way by others than Xanor which, in the sole judgment of **Xanor**, affects the performance or purpose for which it was manufactured, (4) Products (or parts thereof) which are not defective but which may wear out and have to be replaced, like packing, gaskets, bolting, etc.

This limited warranty is made solely for the benefit of the buyer and does not extend to any other party. This limited warranty is not transferable by the buyer.

Xanor's obligations hereunder are limited to repair the Product or any part(s) proven defective in material or workmanship, F.O.B. at Xanor's factory,

If the buyer discovers a defect or nonconformity it must notify **Xanor** in writing within thirty (30) days after the date of discovery of the relevant defect. The buyer shall allow **Xanor** to inspect the Product so that it, at its sole discretion, may determine if a repair or replacement is applicable. If Xanor determines that the Product or part thereof must be replaced, buyer shall return the defective Product or part thereof to **Xanor**.

No returns of Products (or parts thereof) from the buyer will be accepted without prior inspection and written consent performed and granted respectively, by Xanor or by an authorized representative.

This warranty is made in lieu of any warranties whether expressed or implied.

Xanor shall not be (or deemed to be) responsible for consequential or incidental damages, personal injury, damages for loss of use, lost profits, or any other damages whatsoever in connection with the warranties set forth herein.

This warranty does not cover serviceable parts (packing, gaskets, etc.), electric, electronic or pneumatic accessories, etc., installed in our Products, which only have the warranty period given by the manufacturer of such accessories or parts.

The buyer should consult knowledgeable advisors in the selection of Product type and material of construction.

Declaration Of Conformity

Xanor de Mexico, S.A. de C.V. declares that **xanik®** products are designed and manufactured according to customer specifications and/or applicable industrial valve standards and when properly installed and maintained according to **xanik®** maintenance and operational manuals and used for the intended purpose, will not endanger the health and safety of persons and where appropriate, domestic animals and property

Catalog Illustrations

Catalog illustrations and dimensions are only for reference purpose. We reserve the right of making changes in materials, designs, and specifications, without notice.

Catalog Weights

Weights indicated in **xanik®** Catalogs represent only an estimate weight of products and are in no sense guaranteed.

notes

xanor de méxico
limited warranty

Xanor de Mexico S.A. de C.V. ***("Xanor")*** manufacturer of **xanik®** Valves (the "Product"), warrants to the buyer that each Product sold by it shall be free of defects in material and workmanship for a period of 18 (eighteen) months after shipment or 12 (twelve) months after instalation, whichever occurs first.

This limited warranty shall apply only if the Product is properly maintained and used in service which is normal to the particular Product, in accordance with **Xanor** Product's manuals and instructions.

Xanor makes no warranty whatsoever as to (1) integral parts, components or accessories not manufactured by **Xanor**, but instead, the applicable warranties, if any, of the respective manufacturers thereof shall apply, (2) any Product (or part thereof) damaged by misuse, neglect or accident, (3) any Product (or part thereof) shall have been repaired, altered or assembled in any way by others than Xanor which, in the sole judgment of **Xanor**, affects the performance or purpose for which it was manufactured, (4) Products (or parts thereof) which are not defective but which may wear out and have to be replaced, like packing, gaskets, bolting, etc.

This limited warranty is made solely for the benefit of the buyer and does not extend to any other party. This limited warranty is not transferable by the buyer.

Xanor's obligations hereunder are limited to repair the Product or any part(s) proven defective in material or workmanship, F.O.B. at Xanor's factory,

If the buyer discovers a defect or nonconformity it must notify **Xanor** in writing within thirty (30) days after the date of discovery of the relevant defect. The buyer shall allow **Xanor** to inspect the Product so that it, at its sole discretion, may determine if a repair or replacement is applicable. If Xanor determines that the Product or part thereof must be replaced, buyer shall return the defective Product or part thereof to **Xanor**.

No returns of Products (or parts thereof) from the buyer will be accepted without prior inspection and written consent performed and granted respectively, by Xanor or by an authorized representative.

This warranty is made in lieu of any warranties whether expressed or implied.

Xanor shall not be (or deemed to be) responsible for consequential or incidental damages, personal injury, damages for loss of use, lost profits, or any other damages whatsoever in connection with the warranties set forth herein.

This warranty does not cover serviceable parts (packing, gaskets, etc.), electric, electronic or pneumatic accessories, etc., installed in our Products, which only have the warranty period given by the manufacturer of such accessories or parts.

The buyer should consult knowledgeable advisors in the selection of Product type and material of construction.

Declaration Of Conformity

Xanor de Mexico, S.A. de C.V. declares that **xanik®** products are designed and manufactured according to customer specifications and/or applicable industrial valve standards and when properly installed and maintained according to **xanik®** maintenance and operational manuals and used for the intended purpose, will not endanger the health and safety of persons and where appropriate, domestic animals and property

Catalog Illustrations

Catalog illustrations and dimensions are only for reference purpose. We reserve the right of making changes in materials, designs, and specifications, without notice.

Catalog Weights

Weights indicated in **xanik®** Catalogs represent only an estimate weight of products and are in no sense guaranteed.

xanor de méxico, s.a. de c.v.
phone: 52 55 5148 1021 - sales: 52 55 5148 1021, 52 55 5148 1022, email: sales@xanik.com.mx
www.xanik.com

xanik®

Válvulas **xanik®** fabricadas por:

xanor de méxico, s.a. de c.v.

Av. San Luis Tlatilco No. 24 Parque Industrial Naucalpan, Naucalpan
Edo. de México C.P. 53489, México
tel. +52 (55) 5148 1022, e-mail: ventas@xanik.com.mx
tel. +52 (55) 5148 1021, e-mail: sales@xanik.com.mx
conm. +52 (55) 5148 1020 fax: + 52 (55) 5301 1800

www.xanik.com

QMS REGISTERED No. 0179 ® 6D-0087 600-0091 602-0018 CE 0035 TÜVRheinland API Spec Q1 Registered ® Q1-1930