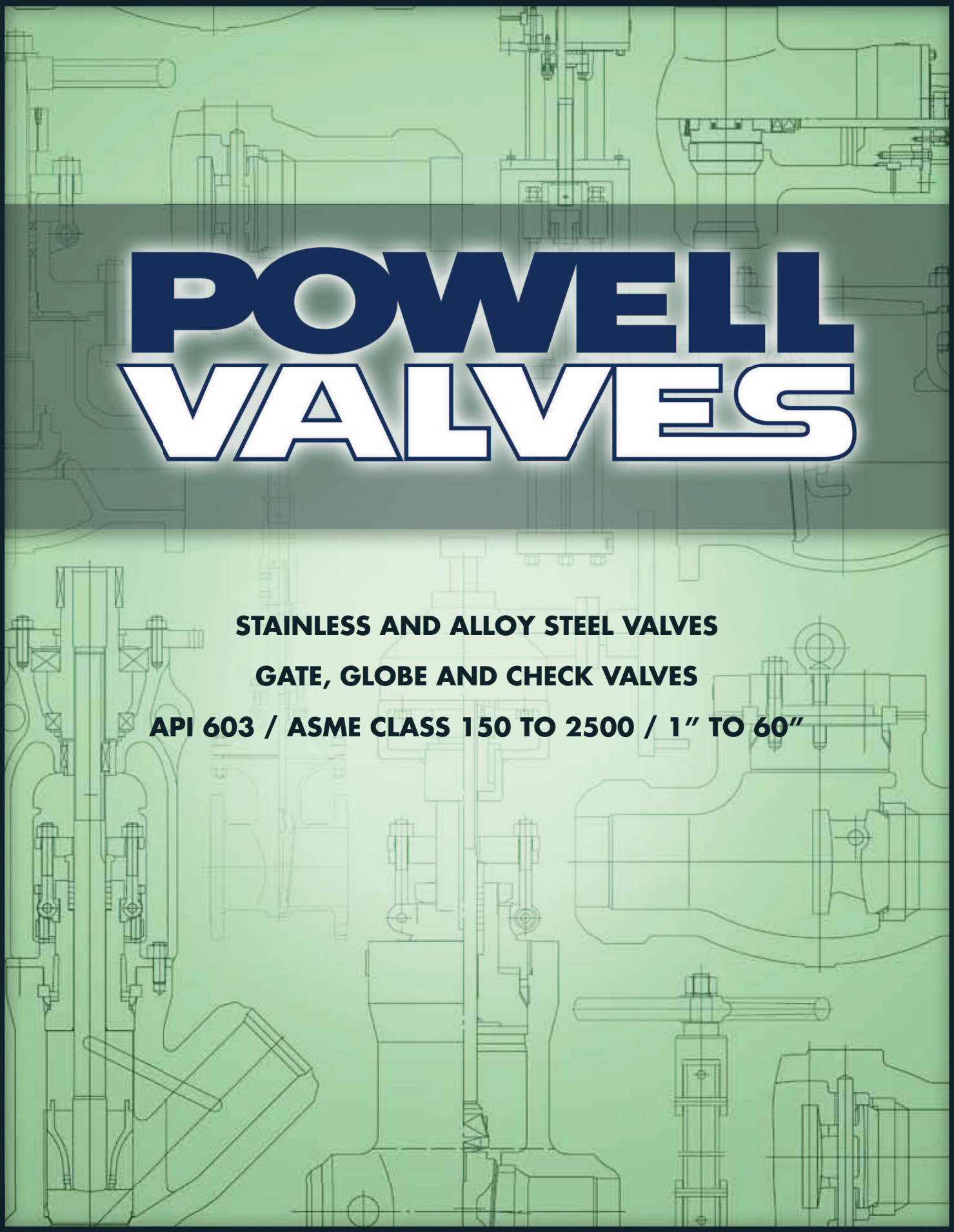

POWELL VALVES

STAINLESS AND ALLOY STEEL VALVES

GATE, GLOBE AND CHECK VALVES

API 603 / ASME CLASS 150 TO 2500 / 1" TO 60"

Catalog: POW-SS-12-r1

Table of Contents

Subject	Page
The Wm. Powell Company–Profile	2-3
Powell's Standard Material Inspection Flow	4
How to Order	5
Fugitive Emissions	6
Gate Valves	7-12
Globe Valves	13-18
Swing Check Valves	19-24
Cryogenic Valves	25
Accessories	26-29
Engineering Data	30-53
Terms of Service	54-56

The Wm. Powell Company - Profile

The Wm. Powell Company is very proud of our achievements and our evolution in the past 166 years. We like to refer to ourselves as 166 years young due to our flexibility in changing quickly to our customer and the industry's needs. Our business strategy is to maintain excellent customer service. We will continue to focus on manufacturing the best of class products both in design features and quality, at competitive prices.

The Wm. Powell Company's products include a wide variety of valves in bronze, iron, steel, and corrosion resistant alloys for class 125 to class 4500 pressure service. Our experience as pioneer in the development of industrial valves encompasses over a century and a half of craftsmanship and valve know-how. Through modern engineering, laboratory, research and testing facilities, the Wm. Powell Company has been a leader in changes in our industry. Our on-going program is a long-term commitment to the valve industry and is poised for significant future growth.

Powell Valves has endured a Civil War, World Wars I and II, and the Korean and Vietnam Wars. Powell rebuilt after floods, U.S. economic disaster in the Great Depression, and fierce foreign competition to help put men on the moon. Whether it was the "Manhattan Project", projects on U.S. Nuclear Submarines, Titan or Atlas rockets, in Nuclear Power plants, at Chemical or Petroleum plants, Pulp and Paper mills, or the harshness of cryogenic use, Powell Valve has a long tradition of quality in temperatures from – 425°F to 1500°F and pressures from Class 125 to 4500.

Powell's market base is the Industrial Users: Petrochemical, Industrial Gas, Pulp & Paper, Pharmaceutical, Hydrocarbon processing, Food processing, Mining, Power Generation, Pipeline, Chemical, and Mechanical construction. Powell has formed business partnerships with industrial end-users, contractors, distributors and A&E's in the United States and around the World. Business partnerships formed on competitively priced product, on-time delivery, service and our tradition of product reliability.

Powell's network of support and product availability is unmatched. Powell offers the most complete multi-turn product line from a single source manufacturer. Powell's products are of the highest quality standards, are competitively priced and are produced with modern manufacturing technology and astute materials sourcing, with strategic purchasing & financial ventures in place.

Powell's diverse products and services, industry knowledge, project capabilities and reputation, coupled with our high quality distribution network, create a win-win arrangement where the end-user, contractor, distributor and manufacturer can benefit.

The Wm. Powell Company has made a commitment to our industry to increase growth and market share, with quality competitive products and services and on-time delivery. This is a global commitment.

Powell's end user customers have to react quickly to the demands that are on them to expand their businesses by implementing increased capacity and introducing new products into the market place at low costs and fast turn around times. Powell has addressed our customer's needs by increasing finished product inventory to over $35,000,000 USD in the U.S.A. and with inventory hubs in Asia and Europe. As an additional advantage to our domestic and global customers, The Wm. Powell Company's Manning, SC facility is a Registered Free Trade Zone.

Powell also used its valve knowledge and expertise to construct a modification facility in the U.S.A. to assist customers with their needs, such as, automation, trim changes, end connection changes, additional quality inspections and special service pressure testing requirements, field service, etc…

The Wm. Powell Company is a closely held private corporation that has been in business since 1846. In fact, only nine presidents have led the Company through its 166, plus, years. The fact that we have been a healthy corporation during this period of time, having survived wars, depressions and natural disasters – in a very competitive marketplace – speaks well for itself.

We look forward to further discussing ways that The Wm. Powell Company can capture current and future opportunities together.

Again, The Wm. Powell Company thanks you for your interest in our company, our products and services. Powell looks forward to discussing ways to be your Preferred Valve Supplier. If you should have any questions, or comments, please contact us.

Sincerely,

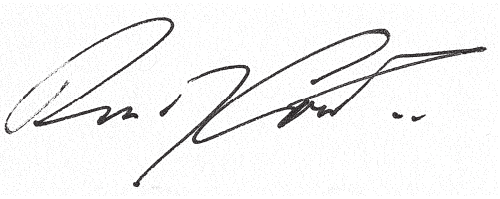

Randy Cowart

President, CEO & Chairman

The Wm. Powell Company

Powell's Standard Material Inspection Flow

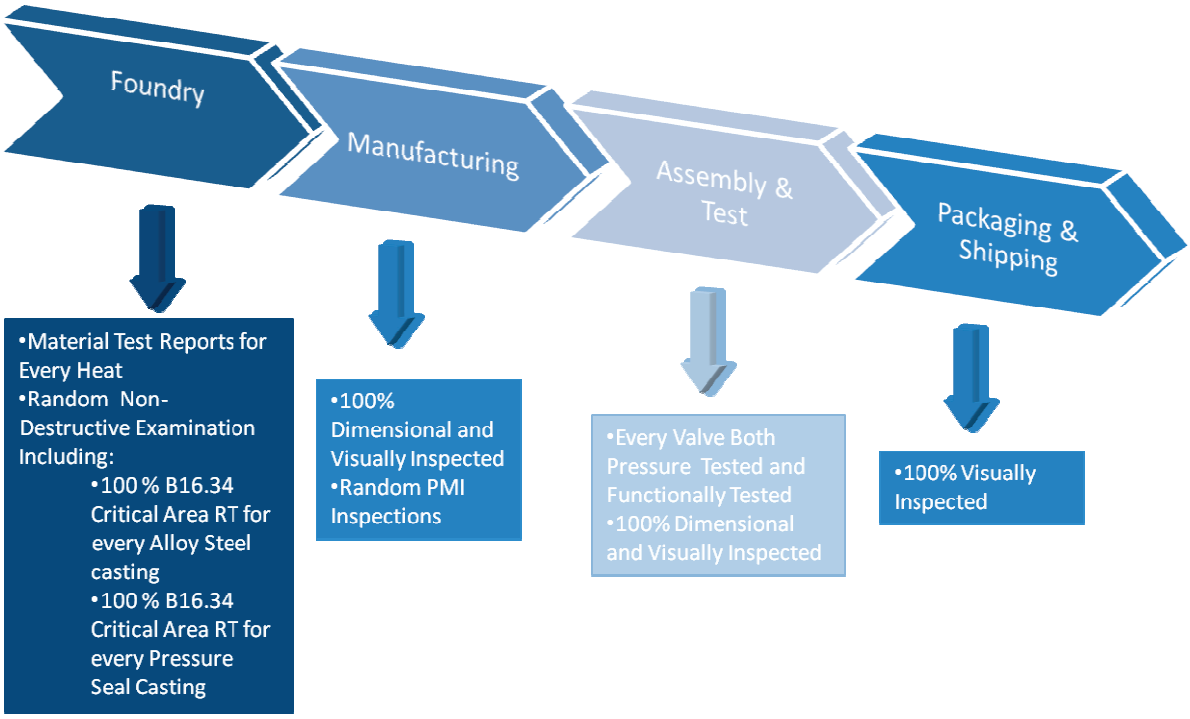

How to Order Powell Corrosion Resistant Valves

The figure number system outlined below is designed to cover the most common configurations. If special features are required which are not listed below, please advise the detailed description for accurate processing.

Digit

1	2	3	4	5	6	7	8	9	10	11	12	13	14	15
Size			Blank	Base Figure Number				End Code	Material Code	Trim	Packing/ Gasket	Option Code		
6	.	0		2	4	5	6	F	M	0	T	X	X	X

Size Code	
Code	**Size**
0.1	1/8”
0.2	1/4"
0.4	3/8”
0.5	1/2"
0.8	3/4"
1.0	1”
1.2	1-1/4”
1.5	1-1/2”
2.0	2”
2.5	2-1/2”
3.0	3”
4.0	4”
5.0	5"
6.0	6”
8.0	8”
10.	10”
12.	12”
14.	14"
16.	16"
18.	18"
20.	20"
24.	24"
30.	30"
36.	36"
48.	48"
etc.	etc.

Base Figure Number
Four digit base figure number. See attached for index.

End Code	
Code	**Description**
A	Sch.100
B	Sch. 140
C	125 RMS Max
D	B16.47 Series B Flg.
E	Flat Face Flg.
F	Flg. End
G	B16.47 Series A Flg.
H	Sch 10/10S
I	Sch 40/40S
J	Sch 80/80S
K	Sch 120
L	Sch 160
M	Sch XS
N	Sch XXS
P	Sch 60
R	RTJ Ends
S	Socket Weld Ends
T	Threaded Ends
U	SW X Thd
W	Sch STANDARD
Z	Special ends

Material Codes	
Code	**Option**
A	A351 CF8 (304)
B	A351 CF3 (304L)
M	A351 CF8M (316)
N	A351 CF3M (316L)
P	A351 CG8M (317)
Q	A351 CG3M (317L)
R	A351 CF8C (347)
S	A351 CN7M (Alloy 20)
T	A494 CZ100 (Nickel)
V	A494 M35-1 (Monel)
W	A494 CW6MC (Inconel 625)
X	A494 CW12MW (Hastelloy C)
Y	A494 CY40 (Inconel 600)
Z	Special Material

Trim	
Code	Option
0	API Trim 10
2	API Trim 12
3	API Trim 13
6	API Trim 16
7	API Trim 17
9	API Trim 9
A	Integral half HF
B	Integral full HF
C	Integral
D	API Trim 11
E	API Trim 2
K	Std Cryo trim w/ PCTFE disc insert
P	Std Cryo trim
G	Std Cryo trim w/ GF TFE disc insert
Z	Special Trim

Packing/Gasket	
Code	Option
G	Std Graphite
T	Std PTFE
X	None
Z	Special Packing or Gasket
M	Packing PTFE, Gasket Graphite
R	Std Graphite, Ring Joint Gasket

Option Codes	
Code	Option
XXX	No Options
BXX	Single Valve Bypass
BA1	Two Valve Bypass
BA2	Two Valve Bypass w/Drain Valve
BA3	One Valve Bypass w/Drain Valve
BA4	Drill & Tap @ Position G
BVX	Bonnet Vent
GXX	Gear Operator
GA5	Gear, 1.25" Hex
GBP	Gear, Single Valve Bypass
GCA	Gear, Locking Device
GB1	Gear, Postion Ind.
EA6	B16.25 FIG 2C
TGD	Glass Filled Disc
TKD	Kel-F Disc
PLL	Live Load Packing
PLR	Lantern Ring
FRT	Radiography
NXX	NACE

Examples:

6.0 2456FM0TXXX 6" Figure 2456 Flanged end, CF8M, trim 10, PTFE

3.0 2342FS6TXXX 3" Figure 2342 Flanged end, CN7M, trim 16, PTFE

3.0 2467JN2TXXX 3" Figure 2467 Sch. 80S, CF3M, trim 12, PTFE

8.0 2456JXCTGXX 8" Figure 2456 Sch. 80S, CW12MW, integral trim, PTFE, gear operator

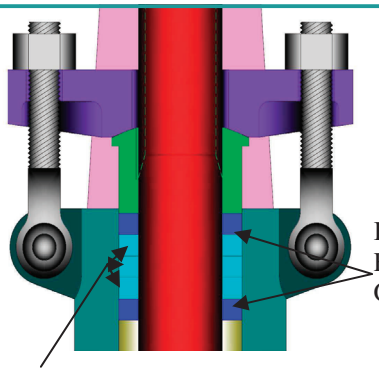

STANDARD PACKING ARRANGEMENT

Powell standard design cast steel valves are designed and manufactured to a 100 ppm maximum fugitive emissions level.

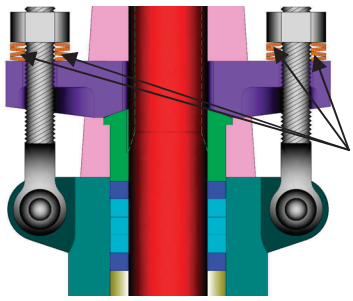

LIVE LOAD OPTION

Live load design with standard packing. Live load washer help maintain packing load to reduce frequency of packing adjustment.

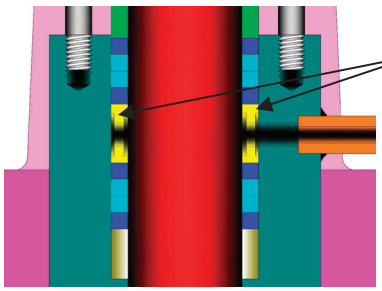

LANTERN RING OPTION

Lantern ring design and other special packing arrangements available. The lantern ring arrangement consists of two packing sets with lantern spacer between the sets. The bonnet connection at the lantern ring location allows monitoring of leakage past packing set.

BODY/BONNET GASKETS

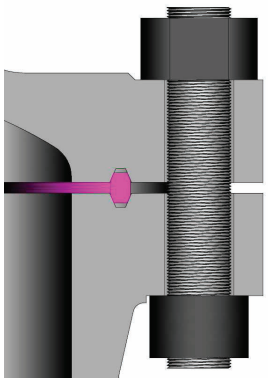

RING JOINT

ASME B16.20 ring joint gasket with material at least equal to body.
Standard gasket arrangement for class 900-1500 valves.
Optionally available on most other valves.

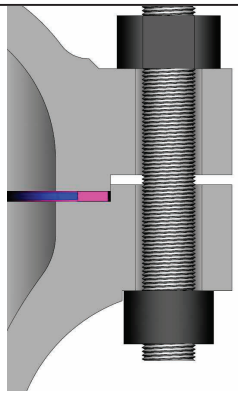

SPIRAL WOUND

Stainless steel spiral wound gasket with PTFE fill and gauge ring for controlled compression.
Standard gasket arrangement for class 300-600 valves.

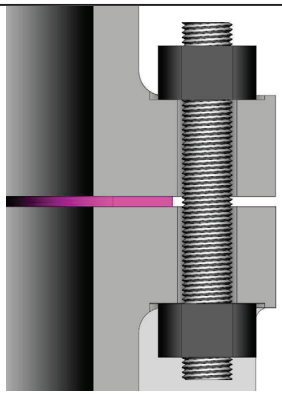

SHEET

Sheet PTFE gasket.
Standard gasket arrangement for class 150 valves.

GATE VALVES
THREADED BONNET, ASME CLASS 200
¼" to 2" (6 TO 50 mm), THREADED OR SOCKET WELD ENDS
CAST STAINLESS STEEL

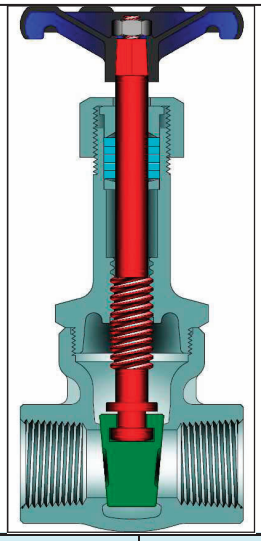

Class	Figure Number
200	1832

DESIGN FEATURES:

- **Fully** guided solid wedge.
- **Socket** weld ends are available.
- **Each** valve is shell, seat and backseat pressure tested per industry standard API 598.
- **Integral** seats are standard.
- **Threaded** ends are NPT type per ASME B1.20.1.
- **Socket** weld ends are per ASME B16.11.

NOTE: Powell reserves the right to convert threaded ends to socket weld. Remnant of threads will exist as pipe stop behind socket bore.

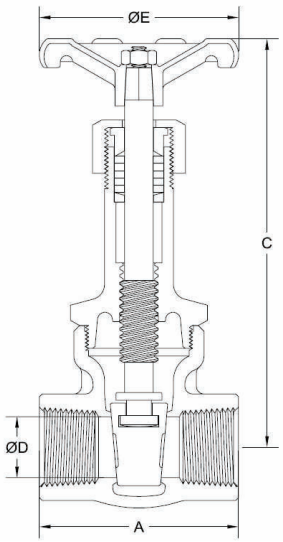

C = Center to top open

WT = Weight
C_V = Flow coefficient

PART	MATERIALS
Body	A351 Gr. CF8M
Bonnet	A351 Gr. CF8M
Wedge	A351 Gr. CF8M
Stem	A276 316
Packing Nut	SST 316
Gland	SST 316
Packing	PTFE
Packing Collar	SST 316
Hand Wheel	A47
Hand Wheel Nut	Steel
Identification Plate	Aluminum

Design Specifications

Item	Applicable Specification
Pressure - temperature ratings	ASME B16.34
General valve design	ASME B16.34
Materials	ASTM

SIZE	ASME 200					
in / mm	A	C	D	E	WT lb / kg	C_V
¼	1.75	4.6	0.38	2.5	0.8	7.1
7	44	116	10	64	0.4	
⅜	2.00	4.6	0.38	2.5	0.8	7.1
10	51	116	10	64	0.4	
½	2.25	5.3	0.50	2.8	1.3	12.6
13	57	133	13	70	0.6	
¾	2.50	6.7	0.75	3.0	2.1	30
20	64	170	19	76	1.0	
1	3.25	7.8	1.00	3.3	3.3	55
25	83	198	25	83	1.5	
1¼	3.50	9.3	1.25	3.6	4.8	87
32	89	236	32	91	2.2	
1 ½	3.75	10.5	1.50	4.1	6.2	130
38	95	267	38	103	2.8	
2	4.00	12.6	2.00	4.8	10.4	240
50	102	321	51	121	4.7	

API 603 GATE VALVES
BOLTED BONNET, ASME CLASS 200-600
¼" to 2" (6 TO 50 mm), THREADED OR SOCKET WELD ENDS
CAST STAINLESS STEEL

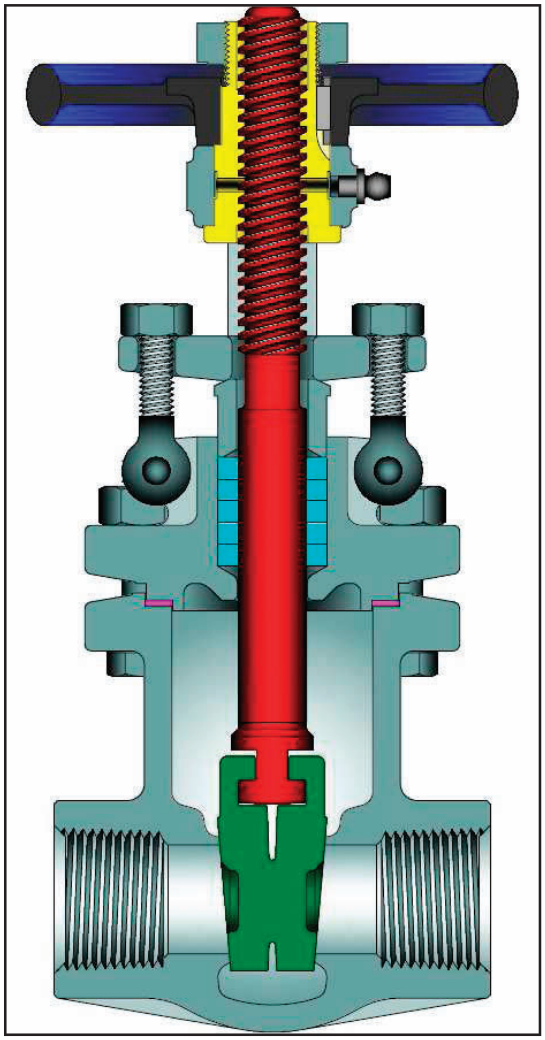

Class	Figure Number
200	2490
300	2467 (1)
600	1973 (1)

STANDARD MATERIALS (Other materials available)

PART	MATERIALS
Body	A351 Gr. CF3M
Bonnet	A351 Gr. CF8M
Wedge	A351 Gr. CF8M
Stem	A276 316
Stem Bushing	A 439 Ductile NI-Resist Gr. D2
Gland Flange	A351 Gr. CF8M
Eye Bolt	A193 Gr. B8
Eye Bolt Nut	A194 Gr.8
Groove Pin	Series 300
Gland	A276 316
Packing	PTFE (2)
Gasket	PTFE (2)
Hand Wheel	Malleable Iron or Steel
Hand Wheel Nut	Malleable Iron or Steel
Key	Steel
Lubricant Fitting	Steel
Body / Bonnet Stud	A193 Gr. B8
Body / Bonnet Nut	A194 Gr.8
Identification Plate	Series 300 SST

1) See pages 10-12 for flanged and buttweld designs.
2) For API 603 compliance, optional graphitic packing and gasket are required.

Design Specifications

Item	Applicable Specification
Wall thickness	API 603 + B16.34
Pressure - temperature ratings	ASME B16.34
General valve design	API 603 & B16.34
End threads—NPT	ASME B1.20.1
Socket weld ends	ASME B16.11
Materials	ASTM

DESIGN FEATURES:

- **Seat face:** Ground and lapped to a smooth finish.
- **Flexible Wedge** with low center stem – wedge contact. Wedge is ground and lapped to a smooth finish and closely guided to prevent dragging and seat damage.
- **Non-rotating stem** with precision ACME threads and burnished finish. Double ACME threads for faster operation.
- **Body and bonnet joint** accurately machined. Gasket materials and details on page 6.
- **Each** valve is shell, seat and backseat pressure tested per industry standard API 598.
- **Valves** are available with socket weld ends.
- **Yoke** bushing can be lubricated to minimize friction and prolong life of the stem.
- **Body and bonnet** castings are precision machined.
- **Gland** has two-piece construction for easy alignment.
- **Each** valve has a unique certification number that is traceable to the valve certification sheet which includes MTR data, pressure test report, inspection report and certificate of conformance.
- **Other** available options as follows:
  -Alternate valve materials
  -Alternate trim materials
  -NACE service
  -Special cleaning for applications such as oxygen or chlorine
  -Other options available as specified

NOTE: Powell reserves the right to convert threaded ends to socket weld. Remnant of threads will exist as pipe stop behind socket bore.

GATE VALVE DIMENSIONS (CLASSES 200-600)

SIZE	ASME 200							ASME 300						
in / mm	A	C	D	E	WT	lb / kg	C_v	A	C	D	E	WT	lb / kg	C_v
¼	2.13	6.5	0.38	3.0	3.5		7.1	2.13	6.5	0.38	3.0	3.4		7.1
6	54	165	10	76	1.6			54	165	10	76	1.5		
⅜	2.13	6.5	0.38	3.0	3.5		7.1	2.13	6.5	0.38	3.0	3.4		7.1
10	54	165	10	76	1.6			54	165	10	76	1.5		
½	3.00	7.8	0.50	3.5	4.8		12.6	3.00	7.9	0.50	3.5	4.6		12.6
13	76	198	13	89	2.2			76	200	13	89	2.1		
¾	3.50	8.6	0.75	4.0	6.5		30	3.50	8.9	0.75	4.0	6.1		30
19	89	219	19	102	2.9			89	225	19	102	2.8		
1	4.00	9.4	1.00	4.5	9.0		55	4.00	9.4	1.00	4.5	9.1		55
25	102	240	25	114	4.1			102	240	25	114	4.1		
1¼	4.63	10.8	1.50	5.0	13.1		130	4.63	10.8	1.25	5.0	13.1		87
32	140	274	38	127	6.0			178	274	32	127	6.0		
1½	4.63	12.1	1.50	6.0	18.0		130	4.63	12.1	1.50	6.0	18.0		130
38	117	308	38	152	8.2			117	308	38	152	8.2		
2	5.00	14.3	2.00	7.0	24.3		240	5.00	14.3	2.00	7.0	28.9		240
50	127	362	51	178	11.0			127	362	51	178	13.1		

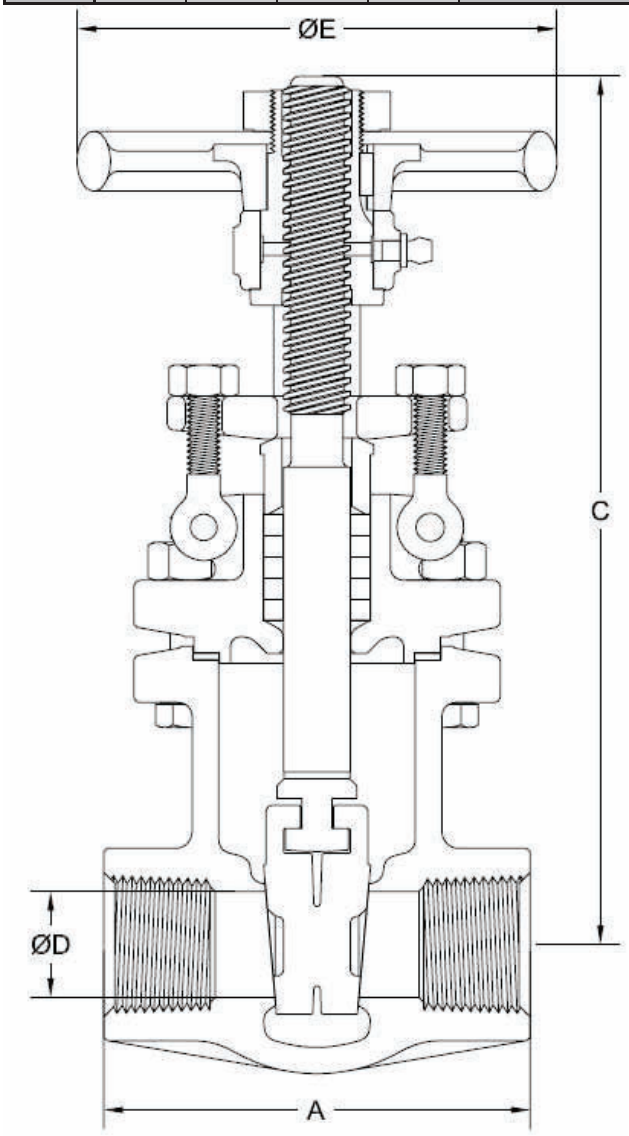

SIZE	ASME 600						
in / mm	A	C	D	E	WT	lb / kg	C_v
¼	2.13	6.6	0.38	3.0	4.3		7.1
6	54	168	10	76	2.0		
⅜	2.13	6.6	0.38	3.0	4.3		7.1
10	54	168	10	76	2.0		
½	3.00	7.9	0.50	3.5	5.1		12.6
13	76	202	13	89	2.3		
¾	3.50	8.9	0.75	4.0	7.1		30
19	89	225	19	102	3.2		
1	4.00	9.8	1.00	5.0	10.6		55
25	102	248	25	127	4.8		
1¼	4.50	11.1	1.25	6.0	15.7		87
32	229	281	32	152	7.1		
1½	5.00	12.4	1.50	7.0	21.3		130
38	127	316	38	178	9.7		
2	5.75	14.3	2.00	8.0	32.0		240
50	146	362	51	203	14.5		

C = Center to top open

WT = Weight
C_V = Flow coefficient

API 603 GATE VALVES
BOLTED BONNET, ASME CLASSES 150-600
FLANGED OR BUTTWELD ENDS
CAST STAINLESS STEEL

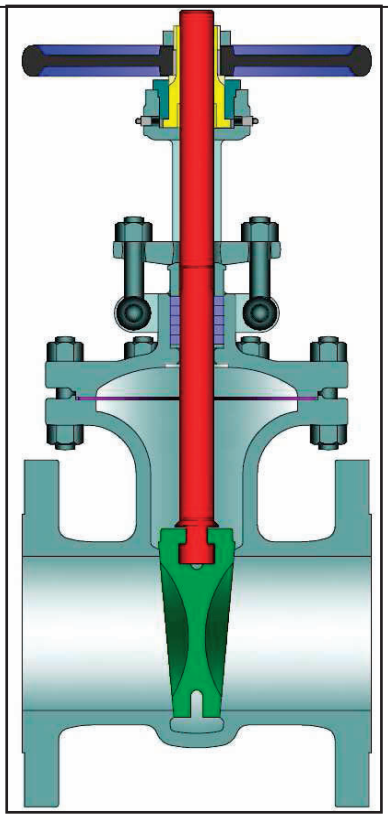

Class	Figure Number
150	2456
300	2467 (4)
600	1973 (4)

STANDARD MATERIALS (Other materials available)

PART	MATERIALS
Body	A351 Gr. CF8M (2)
Bonnet	A351 Gr. CF8M
Wedge	A351 Gr. CF8M
Stem	SST 316
Stem Bushing	A 439 Ductile NI-Resist Gr. D2
Stem Bushing Lock Nut	Series 300 SST
Gland Flange	A351 Gr. CF8M
Eye Bolt	A193 Gr. B8
Eye Bolt Nut	A194 Gr.8
Groove Pin	Series 300 SST
Gland	SST 316
Packing	PTFE (3)
Packing Washer / Packing Spacer	SST 316
Gasket	PTFE (3)
Hand Wheel	Malleable Iron or Steel
Hand Wheel Nut	Malleable Iron or Steel
Key	Steel
Lubricant Fitting	Steel
Body / Bonnet Stud	A193 Gr. B8
Body / Bonnet Nut	A194 Gr.8
Yoke arm (1)	A351 CF8
Bonnet / Yoke arm Stud (1)	A193 Gr. B8
Bonnet / Yoke arm Nut (1)	A194 Gr.8
Bearing Cap (1)	Series 300 SST
Cap Screws (1)	
Identification Plate	

(1) 14" Valve sizes and up all classes have a two piece yoke.
(2) CF3M for weld end bodies.
(3) For API 603 compliance, optional graphitic packing and gasket are required.
(4) See pages 8-9 for 2" and smaller sizes with threaded or socket weld ends.

DESIGN FEATURES:

- **Seat face:** Ground and lapped to a smooth finish.
- **Flexible Wedge** with low center stem –wedge contact. Wedge is ground and lapped to a smooth finish and tightly guided to prevent dragging and seat damage.
- **Non-rotating stem** with precision ACME threads and burnished finish. Double start ACME thread for faster operation.
- **Body and bonnet joint** accurately machined. Gasket materials and details on page 6.
- **Body and bonnet** castings are precision machined. One-piece bonnet up to 12" (350 mm) valve size on all classes.
- **Gland** has two-piece construction for easy alignment.

Design Specifications

Item	Applicable Specification
Wall thickness	API 603 + B16.34
Pressure - temperature ratings	ASME B16.34
General valve design	API 603 & B16.34
End to End dimensions	ASME B16.10
Flange design	ASME B16.5
Butt Weld design	ASME B16.25
Materials	ASTM

- **Flanges:**
  Classes 150-300: 1/16" raised face.
  Class 600: 1/4" raised face.
  Finish 125-250 AARH for all valves.

- **Rotating stem nut** is Austenitic ductile iron Gr D2 renewable in line. Thrust bearings are supplied as follows:
  Class 150 & 300 14" (400 mm) and larger valve size.
  Class 600 6" (150 mm) and larger valve size.

- **Heavier** walled API 600 design available.
- **Classes** above 600 are available; see the API 600 catalog.
- **Other** available options as follows:
  -Alternate valve materials available
  -Bypass, drain and other auxiliary connections
  -Gear, motor, and cylinder actuators available
  -NACE service
  -Special cleaning for applications such as oxygen or chlorine
  -Other options available as specified

GATE VALVE DIMENSIONS (CLASS 150—600).

SIZE	ASME 150						ASME 300					ASME 600				
in	A		B(1)	C(1)	D	E	A	B(1)	C(1)	D	E	A	B(1)	C(1)	D	E
mm	FE	WE														
½	4.25	4.25	7.2	7.8	0.50	3.5	5.50	7.2	7.9	0.50	3.5	6.50	7.3	7.9	0.50	3.5
13	109	108	183	198	13	89	140	183	200	13	89	165	185	202	13	89
¾	4.63	4.63	7.7	8.6	0.75	4.0	6.00	7.9	8.9	0.75	4.0	7.50	8.0	8.9	0.75	4.0
19	117	117	196	219	19	102	152	201	225	19	102	191	203	225	19	102
1	5.00	5.00	8.3	9.4	1.00	4.5	6.50	8.3	9.4	1.00	4.5	8.50	8.6	9.8	1.00	5.0
25	127	127	211	240	25	114	165	211	240	25	114	216	218	248	25	127
1½	6.50	6.50	10.4	12.1	1.50	5.0	7.50	10.4	12.1	1.50	6.0	9.50	10.7	12.4	1.50	7.0
38	165	165	264	308	38	127	191	264	308	38	152	241	272	316	38	178
2	7.00	8.50	12.0	14.3	2.00	6.0	8.50	12.0	14.3	2.00	7.0	11.50	12.3	14.3	2.00	9.0
50	178	216	305	362	51	152	216	305	362	51	178	292	312	362	51	229
2½	7.50	9.50	12.3	15.0	2.50	7.0	9.50	12.6	14.3	2.50	7.9	13.00	18.1	21.9	2.50	12.0
65	191	241	312	380	64	178	241	319	364	64	201	330	461	555	64	305
3	8.00	11.12	13.8	17.0	3.00	7.0	11.12	13.8	17.0	3.00	9.0	14.00	19.2	22.8	3.00	12.0
80	203	282	350	431	76	178	283	350	431	76	229	356	487	580	76	305
4	9.00	12.00	16.8	20.9	4.00	9.0	12.00	16.8	20.9	4.00	10.0	17.00	23.0	27.5	4.00	14.0
100	229	305	427	530	102	229	305	426	530	102	254	432	585	698	102	356
6	10.50	15.88	22.2	28.3	6.00	11.0	15.88	22.6	28.7	6.00	14.0	22.00	32.5	39.1	6.00	20.0
150	267	403	563	720	152	279	403	574	730	152	356	559	825	993	152	508
8	11.50	16.50	29.3	38.0	8.00	14.0	16.50	30.6	39.2	8.00	16.0	26.00	35.0	45.4	7.87	22.0
200	292	419	744	965	203	356	419	777	995	203	406	660	890	1154	200	560
10	13.00	18.00	35.6	46.3	10.00	16.0	18.00	36.8	47.2	10.00	20.0	31.00	41.9	52.4	9.75	25.2
250	330	457	905	1175	254	406	457	935	1199	254	508	787	1065	1332	248	640
12	14.00	19.75	41.1	53.5	12.00	18.0	19.75	42.6	54.7	12.00	20.0	33.00	47.3	59.9	11.75	26.8
300	356	502	1045	1359	305	457	502	1082	1390	305	508	838	1202	1521	298	680
14	15.00	22.50	46.3	60.3	13.25	20.0	30.00	49.1	63.4	13.25	22.0	35.00	51.6	65.4	12.87	28.3
350	381	572	1175	1531	337	508	762	1248	1611	337	560	889	1310	1662	327	720
16	16.00	24.00	51.6	67.9	15.25	22.0	33.00	70.7		15.25	25.2	39.00	73.2		14.75	35.4
400	406	610	1310	1725	387	560	838	1796		387	640	991	1860		375	900
18	17.00	26.00	58.1	76.4	17.25	25.2	36.00	77.2		17.00	26.8	43.00	79.1		16.50	35.4
450	432	660	1477	1940	438	640	914	1961		432	680	1092	2008		419	900
20	18.00	28.00	63.3	83.3	19.25	26.7	38.88	85.3		19.00	28.2	46.75	85.3		18.25	28.0
500	457	711	1615	2123	489	680	991	2176		483	720	1194	2166		464	710
24	20.00	32.00	76.7	101.1	23.25	28.3	45.00	100.9		23.00	35.4	55.00	102.3		22.00	32.0
600	508	813	1948	2568	591	720	1143	2562		584	900	1397	2599		559	810

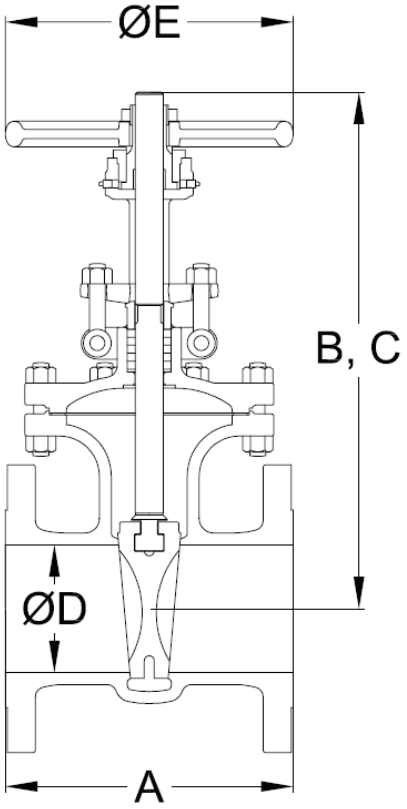

(1) Gear operators standard for 16” and up classes 300 and 600. Height is to top of actuator.

FE = Flanged
WE = Butt weld

B = Center to top closed
C = Center to top open

API 603 GATE VALVES
BOLTED BONNET, ASME CLASSES 150-600
FLANGED OR BUTTWELD ENDS
CAST STAINLESS STEEL

SIZE	ASME 150							ASME 300							ASME 600						
in / mm	F	in / mm	WT FE	lb / kg	WT WE	lb / kg	C_V	F	in / mm	WT FE	lb / kg	WT WE	lb / kg	C_V	F	in / mm	WT FE	lb / kg	WT WE	lb / kg	C_V
½	9.5		6.0		4.8		12.6	9.5		7.3		4.6		12.6	9.6		8.3		5.1		12.6
13	241		2.7		2.2			241		3.3		2.1			244		3.8		2.3		
¾	10.3		8.4		6.5		30	10.3		11.2		6.1		30	10.6		15.0		7.1		30
19	262		3.8		2.9			262		5.1		2.8			269		6.8		3.2		
1	11.3		12.5		9.0		55	11.3		15.4		9.1		55	11.5		20.9		10.6		55
25	287		5.7		4.1			287		7.0		4.1			292		9.5		4.8		
1½	14.5		23.9		18.0		130	14.5		33.1		18.0		130	14.8		38.1		21.3		130
38	368		10.8		8.2			368		15.0		8.2			376		17.3		9.7		
2	16.6		29		24.3		240	16.8		37		28		240	19.8		77		57		240
50	421		13		11			426		17		13			502		35		26		
2½	18.3		43		37		390	20.2		50		36		390	25.7		148		126		390
65	464		20		17			514		23		16			653		67		57		
3	20.7		53		48		560	20.9		53		48		560	27.9		174		143		560
80	527		24		22			530		24		22			709		79		65		
4	25.8		86		75		1020	25.9		119		101		1020	33.4		315		251		1020
100	655		39		34			658		54		46			848		143		114		
6	34.1		139		129		2440	34.6		227		174		2440	46.5		677		573		2440
150	867		63		58			878		103		79			1182		307		260		
8	44.1		251		210		4490	46.5		412		379		4490	54.3		1096		942		4340
200	1119		114		95			1180		187		172			1380		497		427		
10	53.6		419		348		7000	56.0		673		617		7000	62.2		1574		1334		6660
250	1362		190		158			1423		305		280			1581		714		605		
12	61.4		551		536		10500	65.0		957		917		10500	71.1		2000		1702		10000
300	1560		250		243			1650		434		416			1806		907		772		
14	66.7		741		732		12800	73.8		1555		1277		12800	76.2		2761		2373		12000
350	1693		336		332			1875		705		579			1935		1252		1076		
16	74.4		975		963		16900	81.8		1949		1663		16900	84.7		3616		3098		15800
400	1889		442		437			2078		884		754			2151		1640		1405		
18	84.7		1433		1299		22500	89.3		4935		2196		21900	91.5		4507		3861		20600
450	2151		650		589			2267		2238		996			2324		2044		1751		
20	94.7		1744		1678		28100	98.1		3380		2745		27300	99.1		4507		4279		25200
500	2414		791		761			2502		1533		1245			2517		2044		1941		
24	112.6		2580		2481		40900	115.8		4911		3958		40000	116.5		7949		7621		36600
600	2859		1170		1125			2942		2227		1795			2960		3605		3457		

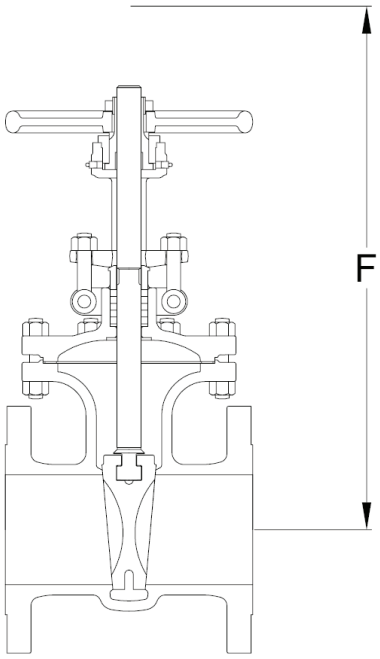

FE = Flanged ends
WE = Weld ends

F = Dismantling Dimension

WT = Weight
C_V = Flow coefficient

GLOBE VALVES
THREADED BONNET, 200 W.O.G.
¼ to 2“ (6 TO 50 mm), THREADED ENDS
CAST STAINLESS STEEL

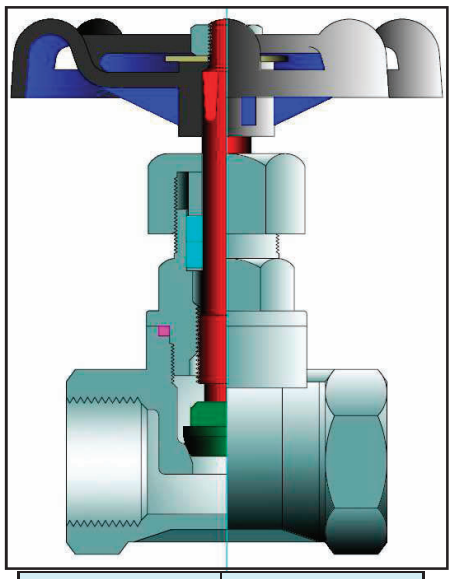

Class	Figure Number
200 W.O.G.	1861

DESIGN FEATURES:

- **Swivel** disc for optimal seating and longer seat life are non-rotating.
- **Stems** are rotating / rising design.
- **Each** valve is shell, seat and backseat pressure tested per industry standard API 598.
- **Integral** seats are standard.
- **Threaded ends** are NPT type per ASME B1.20.1.

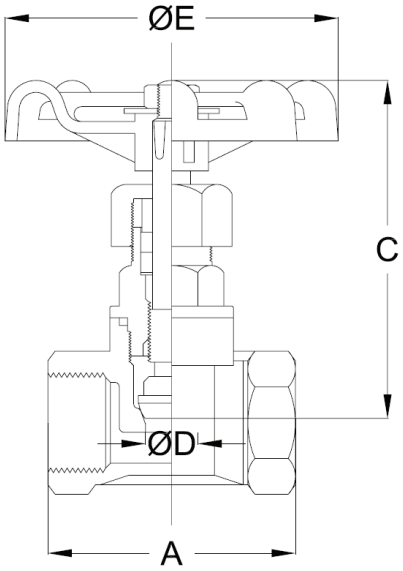

C = Center to top open

WT = Weight
C_V = Flow coefficient

PART	MATERIALS
Body	A351 Gr. CF8M
Bonnet	A351 Gr. CF8M
Disc	SST 316
Disc Nut	SST 316
Stem	SST 316
Packing Nut	SST 316
Gland	SST 304
Packing	PTFE
Packing Washer	SST 316
Gasket	PTFE
Hand Wheel	Aluminum
Hand Wheel Nut	SST 304
Identification Plate	Series 300 SST

SIZE	200 W.O.G.					
in / mm	A	C	D	E	WT lb / kg	C_V
¼	2.05	3.0	0.50	2.8	0.6	2.5
7	52	77	12	70	0.3	
⅜	2.05	3.0	0.50	2.8	0.6	2.5
10	52	77	12	70	0.3	
½	2.05	3.1	0.50	2.8	0.6	2.5
13	52	79	12	70	0.3	
¾	2.36	3.6	0.60	2.8	1.0	3.7
20	60	91	15	70	0.4	
1	2.83	4.1	0.80	3.1	1.3	6.8
25	72	105	20	80	0.6	
1¼	3.19	5.0	1.00	3.1	2.5	10.9
32	81	127	25	80	1.1	
1 ½	3.54	5.6	1.25	3.5	2.7	17.5
38	90	142	32	90	1.2	
2	3.98	6.2	1.60	3.9	3.8	30
50	101	158	40	100	1.7	

API 603 WALL GLOBE VALVES
BOLTED BONNET, CLASSES 200-600
¼" to 2" (6 TO 50 mm), THREADED OR SOCKET WELD ENDS
CAST STAINLESS STEEL

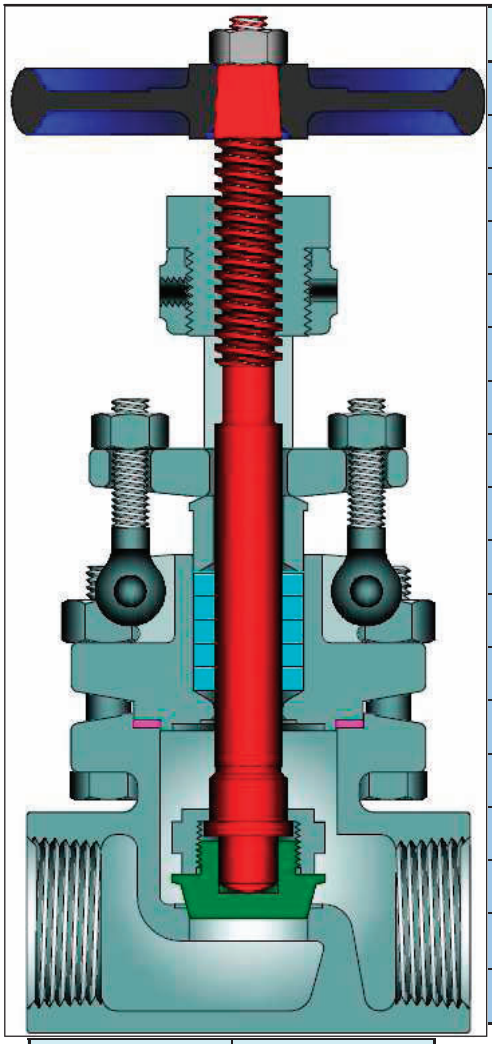

PART	MATERIALS
Body	A351 Gr. CF3M
Bonnet	A351 Gr. CF8M
Disc	A276 316
Disc Nut	A276 316
Stem	A276 316
Gland Flange	A351 Gr. CF8M
Eye Bolt	A193 Gr. B8
Eye Bolt Nut	A194 Gr. 8
Gland	A276 316
Packing	PTFE
Gasket	PTFE
Hand Wheel	A47
Hand Wheel Nut	Steel
Stem Bushing	A582 416
Body / Bonnet Bolt	A193 Gr. B8
Body / Bonnet Nut	A194 Gr.8
Set Screw	Steel
Identification Plate	Series 300 SST

Class	Figure Number
200	2474
300	2447 (1)
600	1983 (1)

1) See pages 16-18 for flanged and butt weld designs.

Design Specifications

Item	Applicable Specification
Wall thickness	API 603 & B16.34
Pressure - temperature ratings	ASME B16.34
General valve design	ASME B16.34
End Threads-NPT	ASME B1.20.1
Socket Weld Ends	ASME B16.11
Materials	ASTM

DESIGN FEATURES:

- **Seat face:** Ground and lapped to a smooth finish.
- **Body and bonnet joint** accurately machined. Gasket materials and details on page 6.
- **Swivel** disc for optimal seating and longer seat life .
- **Stems** are rotating / rising design.
- **Each** valve is shell, seat and backseat pressure tested per industry standard API 598.
- **Body and bonnet** castings are precision machined.
- **Gland** has two-piece construction for easy alignment.
- **Each** valve has a unique certification number that is traceable to the valve certification sheet which includes MTR data, pressure test, inspection result and certificate of conformance.
- **Other** available options as follows:
  -Alternate valve materials available
  -NACE service
  -Special cleaning for applications such as oxygen or chlorine
  -Other options available as specified

NOTE: Powell reserves the right to convert threaded ends to socket weld when needed, which will result in thread remnants as pipe stop.

GLOBE VALVE DIMENSIONS (CLASS 200—600).

SIZE	ASME 200							ASME 300						
in / mm	A	C	D	E	WT	lb / kg	C_V	A	C	D	E	WT	lb / kg	C_V
¼	2.88	6.8	0.50	3.0	3.5		2.5	2.88	6.8	0.50	3.0	3.6		2.5
7	73	171	13	76	1.6			73	171	13	76	1.6		
⅜	2.88	6.8	0.50	3.0	3.5		2.5	2.88	6.8	0.50	3.0	3.6		2.5
10	73	171	13	76	1.6			73	171	13	76	1.6		
½	2.88	6.8	0.50	3.0	3.5		2.5	2.88	6.8	0.50	3.0	3.8		2.5
13	73	171	13	76	1.6			73	171	13	76	1.7		
¾	3.25	7.3	0.75	3.5	4.5		5.8	3.25	7.3	0.75	3.5	4.6		5.8
20	83	186	19	89	2.0			83	186	19	89	2.1		
1	3.75	8.2	1.00	4.0	6.7		10.7	3.75	8.2	1.00	4.0	7.1		10.7
25	95	208	25	102	3.0			95	208	25	102	3.2		
1¼	5.50	8.9	1.50	5.0	10.5		25	5.50	8.9	1.50	5.0	13.5		25
32	140	226	38	127	4.8			140	226	38	127	6.1		
1½	5.50	9.9	1.50	5.0	13.7		25	5.50	9.9	1.50	5.0	19.1		25
38	140	251	38	127	6.2			140	251	38	127	8.7		
2	6.00	10.9	2.00	6.0	19.8		50	6.00	10.9	2.00	6.0	25.8		50
50	152	276	51	152	9.0			152	276	51	152	11.7		

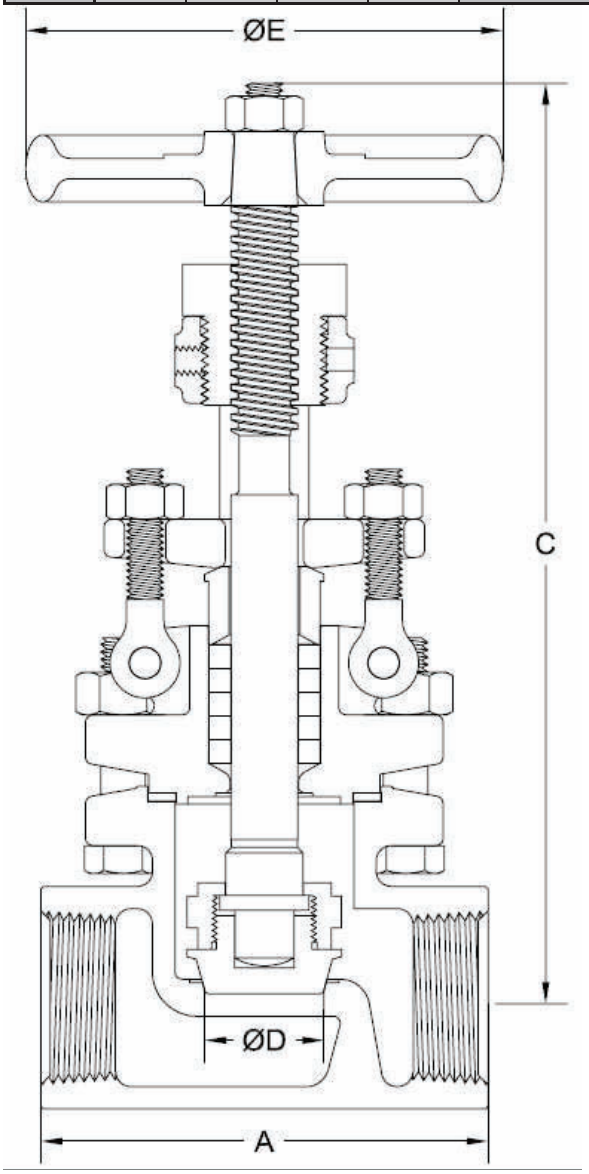

SIZE	ASME 600						
in / mm	A	C	D	E	WT	lb / kg	C_V
¼	2.88	6.8	0.50	3.0	3.7		2.5
7	73	171	13	76	1.7		
⅜	2.88	6.8	0.50	3.0	3.7		2.5
10	73	171	13	76	1.7		
½	2.88	6.8	0.50	3.0	3.7		2.5
13	73	171	13	76	1.7		
¾	3.25	7.3	0.75	3.5	4.8		5.8
20	83	186	19	89	2.2		
1	3.75	8.3	1.00	5.0	7.4		10.7
25	95	211	25	127	3.4		
1¼	5.00	10.6	1.25	6.0	17.5		17.1
32	127	269	32	152	7.9		
1½	5.63	10.9	1.50	7.0	21.0		25
38	143	276	38	178	9.5		
2	6.25	12.8	2.00`	8.0	40.0		50
50	159	324	51	203	18.1		

C = Center to top open

WT = Weight
C_V = Flow Coefficient

API 603 WALL GLOBE VALVES
BOLTED BONNET, ASME CLASS 150-600
FLANGED AND BUTTWELD ENDS
CAST STAINLESS STEEL

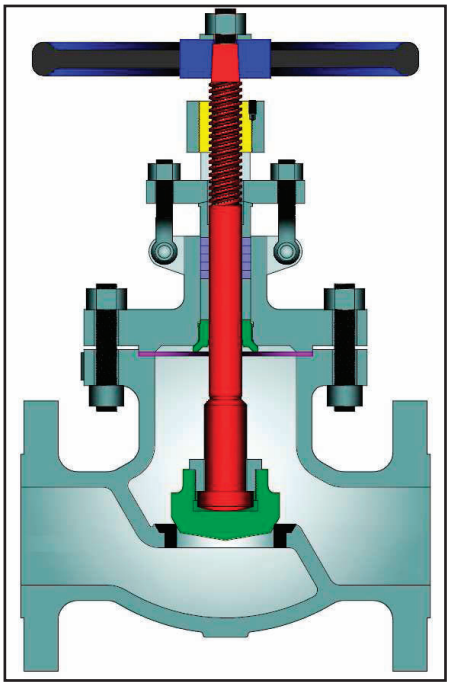

PART	MATERIALS
Body	A351 Gr. CF8M (2)
Bonnet / Yoke arm	A351 Gr. CF8M
Disc	A276 316
Disc Nut	A276 316
Stem	A276 316
Stem Bushing	A439 D-2 (4)
Gland Flange	A351 Gr. CF8
Eye Bolt	A193 Gr. B8
Eye Bolt Nut	A194 Gr.8
Gland	A276 316
Packing	PTFE
Packing Washer / Packing Spacer	A276 316
Gasket	PTFE
Back Seat Bushing (5)	A276 316
Hand Wheel	A47
Hand Wheel Nut	Steel
Body / Bonnet Stud	A193 Gr. B8
Body / Bonnet Nut	A194 Gr.8
Bonnet / Yoke arm Stud (1)	A193 Gr. B8
Bonnet / Yoke arm Nut (1)	A194 Gr.8
Bearing Cap (1)	Series 300 SST
Cap Screws (1)	
Identification Plate	

Class	Figure Number
150	2475
300	2447 (3)
600	1983 (3)

(1) 14” Valve sizes and up all classes have a two piece yoke.
(2) CF3M for weld end bodies.
(3) See pages 14-15 for 2” and smaller sizes with threaded or socket weld ends.
(4) For valve sizes 2” and smaller, T416 steel is used.
(5) Used in valve sizes 2½” and larger.

DESIGN FEATURES:

- **Seat face:** Ground and lapped to a smooth finish.
- **Body and bonnet joint** accurately machined. Gasket materials and details on page 6.
- **Swivel** disc for optimal seating and longer seat life.
- **Stems** of hand wheel operated design are rotating / rising design.
- **Each** valve is shell, seat and back-seat pressure tested per industry standard API 598.
- **Integral** seats are standard. Renewable seat rings available on special order
- **Body and bonnet** castings are precision machined. One-piece bonnet up to 12” (350 mm) valve size on all classes.
- **Gland** has two-piece construction for easy alignment.
- **Weld** ends are available per ASME B16.25 or per customer’s specification.

Design Specifications

Item	Applicable Specification
Wall thickness	API 603 & B16.34
Pressure - temperature ratings	ASME B16.34
General valve design	B16.34
End to End dimensions	ASME B16.10
Flange design	ASME B16.5
Butt Weld design	ASME B16.25
Materials	ASTM

- **Flanges:**
  Classes 150-300: 1/16” raised face.
  Class 600: 1/4” raised face.
  Finish 125-250 AARH for all valves.
- **Threaded and socket weld** ends are available on sizes 2” and smaller.
- **Each** valve has a unique certification number that is traceable to the valve certification sheet which includes MTR data, pressure test, inspection result and certificate of conformance.
- **Heavier** walled API 600 design available.
- **Other** available options as follows:
  -Alternate valve materials such as chrome and stainless steel alloys
  -Alternate trim materials
  -Bypass, drain and other auxiliary connections
  -Gear, motor, and cylinder actuators available
  -NACE service
  -Special cleaning for applications such as oxygen or chlorine
  -Other options available as specified

GLOBE VALVE DIMENSIONS (CLASS 150—600).

SIZE	ASME 150					ASME 300					ASME 600				
in	A	B	C	D	E	A	B	C	D	E	A	B (1)	C (1)	D	E
mm	FE/WE					FE/WE					FE/WE				
½	4.25	6.3	6.8	0.50	3.0	6.00	6.3	6.8	0.50	3.0	6.50	7.5	8.1	0.50	3.0
13	108	160	171	13	76	152	160	171	13	76	165	191	206	13	76
¾	4.63	6.8	7.3	0.75	3.5	7.00	6.8	7.3	0.75	3.5	7.50	8.9	9.5	0.75	3.5
20	117	173	186	19	89	178	173	186	19	89	191	225	241	19	89
1	5.00	7.7	8.2	1.00	4.0	8.00	7.7	8.2	1.00	4.0	8.50	9.9	10.5	1.00	5.0
25	127	196	208	25	102	203	196	208	25	102	216	251	267	25	127
1½	6.50	9.0	9.9	1.50	5.0	9.00	9.0	9.9	1.50	5.0	9.50	10.9	11.6	1.50	7.0
38	165	229	251	38	127	229	229	251	38	127	241	277	295	38	178
2	8.00	9.9	10.9	2.00	6.0	10.50	9.9	10.9	2.00	6.0	11.50	12.5	13.3	2.00	8.0
50	203	251	276	51	152	267	251	276	51	152	292	318	338	51	203
2½	8.50	14.9	16.4	2.50	9.8	11.50	16.7	18.2	2.50	9.8	13.00	16.4	17.6	2.50	11.81
65	216	378	416	64	250	292	423	461	64	250	330	416	448	64	300
3	9.50	14.1	15.4	3.00	11.8	12.50	14.1	15.4	3.00	11.8	14.00	17.2	18.7	3.00	13.8
80	241	357	390	76	300	318	357	390	76	300	355	438	475	76	350
4	11.50	16.5	18.0	4.00	11.8	14.00	16.7	18.0	4.00	13.8	17.00	20.2	21.7	4.00	17.7
100	292	419	457	102	300	356	423	458	102	350	431	514	552	102	450
6	16.00	17.6	19.7	6.00	15.8	17.50	21.0	23.2	6.00	17.7	22.00	25.7	27.9	6.00	23.6
150	406	446	499	152	400	445	534	589	152	450	558	653	709	152	600
8	19.50	20.1	22.6	8.00	17.7	22.00	23.9	26.3	8.00	21.7	26.00	29.1	31.6	7.88	27.7
200	495	511	574	203	450	559	606	669	203	550	660	739	803	200	700
10	24.50	23.9	26.9	10.00	21.7	24.50	26.7	29.7	10.00	23.6	31.00	41.3 (1)		9.75	27.7
250	622	606	682	254	550	622	677	753	254	600	787	1049 (1)		248	700
12	27.50	27.1	30.6	12.00	23.6	28.00	30.6	34.2	12.00	27.6	33.00	47.8 (1)		11.75	31.5
300	699	688	778	305	600	711	778	868	305	700	838	1215 (1)		298	800

(1) Gear operators standard for 10” and up for class 600. Height is to top of actuator.

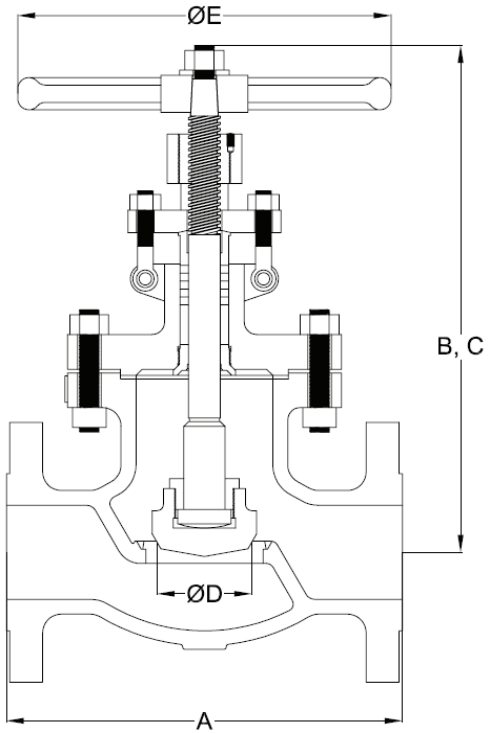

FE = Flanged
WE = Butt weld

B = Center to top closed
C = Center to top open

API 603 WALL GLOBE VALVES
BOLTED BONNET, ASME CLASS 150-600
FLANGED AND BUTTWELD ENDS
CAST STAINLESS STEEL

SIZE	ASME 150							ASME 300							ASME 600						
in / mm	F	in / mm	WT FE	lb kg	WT WE	lb kg	C_V	F	in / mm	WT FE	lb kg	WT WE	lb kg	C_V	F	in / mm	WT FE	lb kg	WT WE	lb kg	C_V
½	7.9		5.0		3.5		2.5	7.9		6.5		3.8		2.5	9.0		8.1		3.8		2.5
13	201		2.3		1.6			201		2.9		1.7			229		3.7		1.7		
¾	8.5		6.5		4.5		5.8	8.5		11.3		4.6		5.8	10.6		12.8		4.8		5.8
20	216		2.9		2.0			216		5.1		2.1			269		5.8		2.2		
1	9.6		9.3		6.7		10.7	9.6		13.1		7.1		10.7	11.9		16.5		7.4		10.7
25	244		4.2		3.0			244		5.9		3.2			302		7.5		3.4		
1½	11.5		20.0		13.7		25	11.5		25.3		19.1		25	13.9		35.8		21.0		25
38	292		9.1		6.2			292		11.4		8.7			353		16.2		9.5		
2	13.1		29.5		19.8		50	13.1		34.1		25.8		50	16.3		58.0		40.0		50
50	333		13.4		9.0			333		15.5		11.7			414		26.3		18.1		
2½	16.0		46		38		75	16.3		71		57		75	20.1		148		126		75
65	406		21		17			414		32		26			510		67		57		
3	18.0		87		71		110	18.0		117		95		110	25.5		174		143		110
80	456		40		32			456		53		43			647		79		65		
4	21.3		135		108		200	20.7		165		132		200	25.0		315		251		200
100	541		61		49			525		75		60			635		143		114		
6	25.3		227		183		480	27.2		342		273		480	32.3		677		573		480
150	643		103		83			692		155		124			822		307		260		
8	26.7		375		300		880	30.6		644		516		880	36.5		1096		942		850
200	678		170		136			776		292		234			928		497		427		
10	31.5		706		565		1370	34.4		1064		851		1370	41.7		1574		1334		1300
250	801		320		256			873		483		386			1059		714		605		
12	37.6		1056		849		2050	40.1		1361		1089		2050	54.8		2000		1702		2000
300	956		479		385			1018		617		494			1391		907		772		

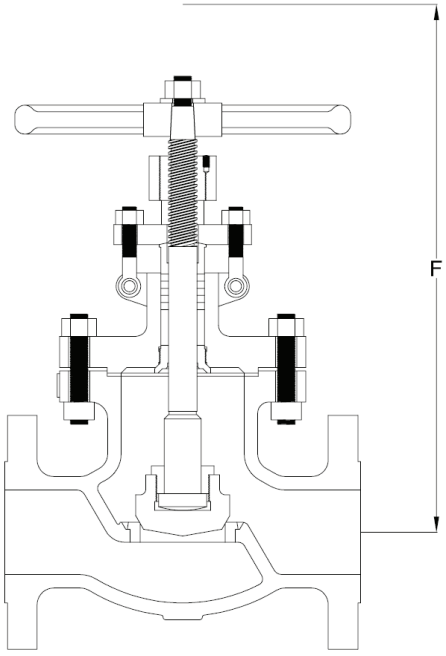

FE = Flanged ends
WE = Weld ends

F = Dismantling Dimension

C_V = Flow coefficient
WT = Weight

SWING CHECK VALVES
THREADED BONNET, 200 W.O.G.
¼ to 2“ (6 TO 50 mm), THREADED
CAST STAINLESS STEEL

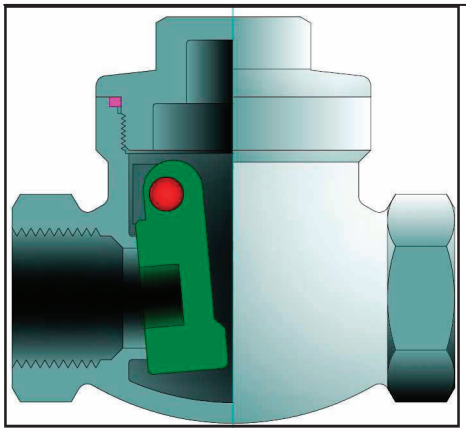

Class	Figure Number
200 W.O.G.	1847

DESIGN FEATURES:

- **Integral Seats**.
- **Each** valve is shell and seat pressure tested per industry standard API 598.
- **Check** valve are suitable for service in horizontal line with cap vertical or in a vertical line with flow upward.
- **Threaded ends** are NPT type per ASME B1.20.1.

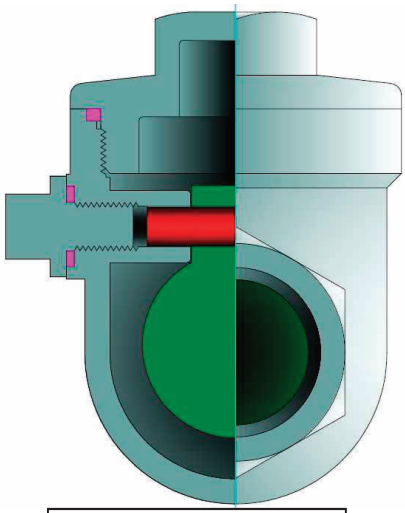

Side view of valve.

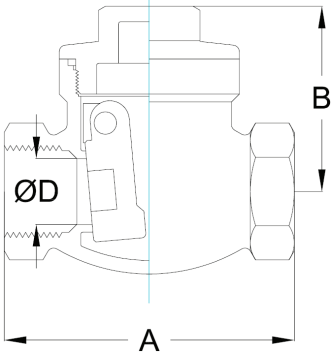

STANDARD MATERIALS (Other materials available)

PART	MATERIALS
Body	A351 Gr. CF8M
Cap	A351 Gr. CF8M
Disc	A276 316
Gasket	PTFE
Pin	A276 316
Plug	SST 316
Plug Gasket	PTFE
Identification Plate	Series 300 SST

SIZE	200 W.O.G.				
in / mm	A	B	D	WT lb / kg	C_V
¼	2.50	1.7	0.56	0.7	1.0
6	65	42	15	0.3	
⅜	2.50	1.7	0.56	0.7	2.2
10	65	42	15	0.3	
½	2.50	1.7	0.56	0.7	3.9
13	65	42	15	0.3	
¾	3.13	2.0	0.75	0.9	9.2
19	80	51	20	0.4	
1	3.56	2.4	1.00	1.5	17.0
25	90	60	25	0.7	
1¼	4.13	2.64	1.25	2.2	27
32	105	67	32	1.0	
1 ½	4.75	3.0	1.56	3.2	40
38	120	75	40	1.5	
2	5.50	3.2	2.00	4.7	75
50	140	81	50	2.1	

B = Center to top

WT = Weight
C_V = Flow coefficient

API 603 WALL SWING CHECK VALVES
BOLTED BONNET, CLASS 200-600
¼ to 2“ (6 TO 50 mm), THREADED OR SOCKET WELD ENDS
CAST STAINLESS STEEL

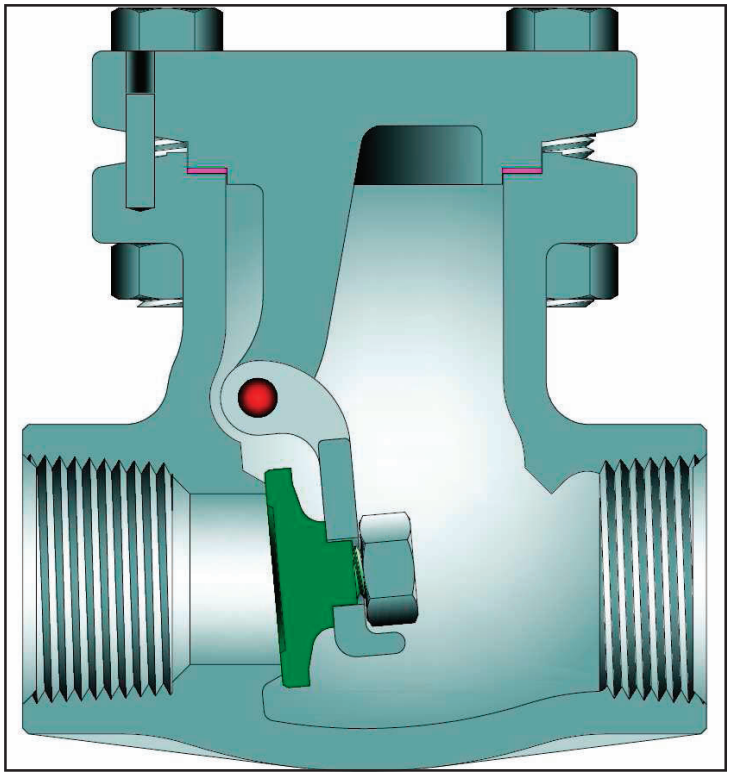

Class	Figure Number
200	2341
300	2346 (1)
600	2350 (1)

STANDARD MATERIALS
(Other materials available)

PART	MATERIALS
Body	A351 Gr. CF3M
Cap	A351 Gr. CF8M
Disc	A276 316
Gasket	PTFE
Carrier	A351 Gr. CF8M
Carrier Pin	A276 316
Disc Nut	SST 316
Body / Cap Stud	A193 Gr. B8
Body / Cap Nut	A194 Gr.8
Locating Pin	SST
Identification Plate	Series 300 SST

1) See pages 22-24 for flanged and butt weld designs.

DESIGN FEATURES:

- **Integral Seats**
- **Wall** thickness per API 603 requirements.
- **Swivel disc** for improved seat alignment and longer life.
- **Each** valve is shell and seat pressure tested per industry standard API 598.
- **Check** valves are suitable for service in horizontal line with cap vertical or in a vertical line with flow upward.
- **Carrier Pin** is confined within the body wall and is not accessible from the exterior. This eliminates potential leak path with side plug design.
- **Disc** suspended from valve cap and without side plugs.
- **Cap** has a male and female joint.
- **Each** valve has a unique certification number that is traceable to the valve certification sheet which includes MTR data, pressure test, inspection result and certificate of conformance.
- **Other** available options as follows:
  -Alternate valve materials
  -Alternate trim materials
  -NACE service
  -Special cleaning for applications such as oxygen or chlorine

NOTE: Powell reserves the right to convert threaded ends to socket weld, which will result in thread remnants as pipe stop.

Design Specifications

Item	Applicable Specification
Wall thickness	API 603 & B16.34
Pressure - temperature ratings	ASME B16.34
General valve design	ASME B16.34
End Threads-NPT	ASME B1.20.1
Socket Weld Ends	ASME B16.11
Materials	ASTM

SWING CHECK VALVE DIMENSIONS (CLASS 200-600)

SIZE	ASME 200						ASME 300					
in / mm	A	B	D	WT	lb / kg	C_V	A	B	D	WT	lb / kg	C_V
¼	2.75	2.2	0.44	2.1		3.0	2.75	2.2	0.44	2.1		3.0
6	70	55	11	1.0			70	55	11	1.0		
⅜	2.75	2.2	0.44	2.1		3.0	2.75	2.2	0.44	2.1		3.0
10	70	55	11	1.0			70	55	11	1.0		
½	2.75	2.2	0.44	2.1		3.0	2.75	2.2	0.44	2.1		3.0
13	70	55	11	1.0			70	55	11	1.0		
¾	3.75	3.0	0.75	3.3		9.2	3.75	3.0	0.75	4.4		9.2
19	95	76	19	1.5			95	76	19	2.0		
1	4.00	3.4	1.00	4.9		17	4.00	3.4	1.00	6.1		17
25	102	86	25	2.2			102	86	25	2.8		
1¼	4.75	3.4	1.25	7.3		27	4.75	3.4	1.25	8.5		27
32	121	86	32	3.3			121	86	32	3.9		
1½	5.50	4.1	1.50	10.6		40	5.50	4.1	1.50	10.6		40
38	140	103	38	4.8			140	103	38	4.8		
2	6.00	4.6	2.00	15.5		75	6.00	4.6	2.00	15.5		75
50	152	116	51	7.0			152	116	51	7.0		

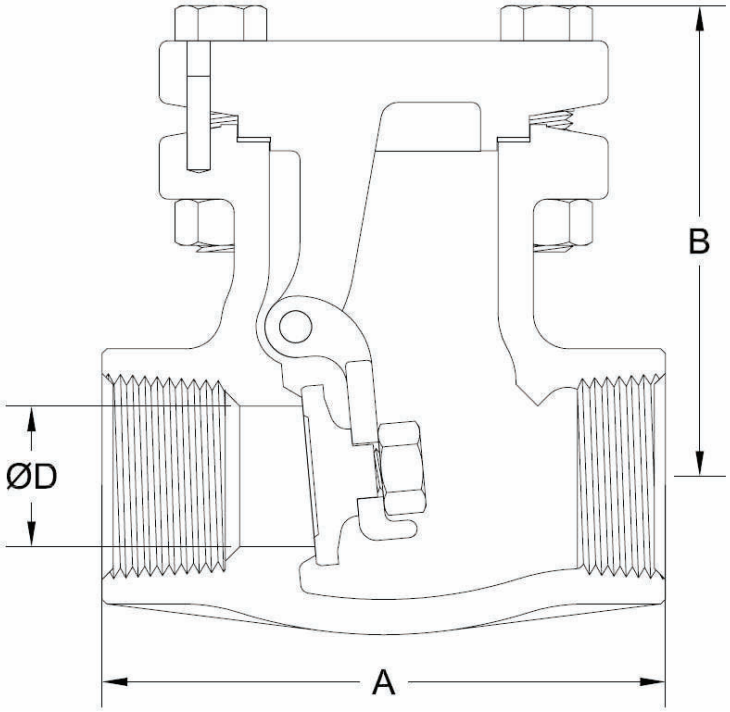

B = Center to top

WT = Weight
C_V = Flow coefficient

SIZE	ASME 600					
in / mm	A	B	D	WT	lb / kg	C_V
¼	2.75	2.3	0.44	7.0		3.0
6	70	58	11	3.2		
⅜	2.75	2.3	0.44	7.0		3.0
10	70	58	11	3.2		
½	2.75	2.3	0.44	7.0		3.0
13	70	58	11	3.2		
¾	3.75	3.1	0.75	8.5		9.2
19	95	79	19	3.9		
1	4.00	3.5	1.00	11.0		17
25	102	90	25	5.0		
1¼	4.75	3.5	1.25	13.2		27
32	121	90	32	6.0		
1½	5.63	4.3	1.50	14.6		40
38	143	108	38	6.6		
2	6.25	5.4	2.00	35.0		75
50	159	138	51	15.9		

API 603 WALL SWING CHECK VALVES
BOLTED BONNET, CLASSES 150-600
FLANGED AND BUTTWELD ENDS
CAST STAINLESS STEEL

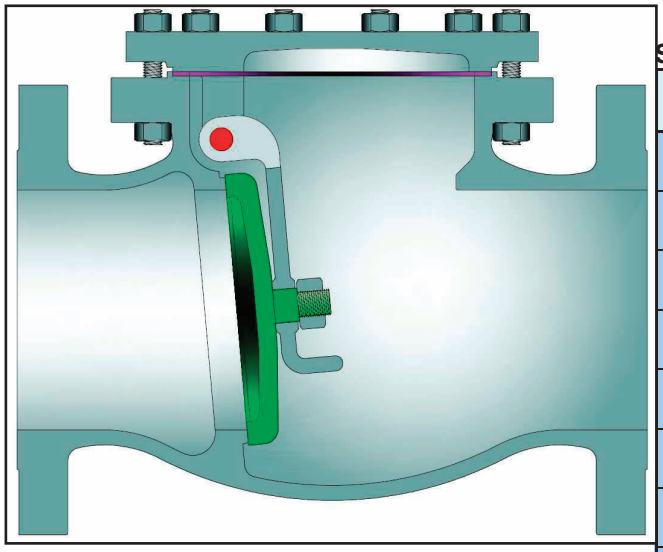

Class	Figure Number
150	2342
300	2346 (3)
600	2350 (3)

STANDARD MATERIALS (Other materials available)

PART	MATERIALS
Body	A351 Gr. CF8M (2)
Cap	A351 Gr. CF8M
Disc	A276 316
Gasket	PTFE
Carrier	A351 Gr. CF8M
Carrier Pin	A276 316
Disc Nut	SST 316
Disc Carrier Hanger (1)	A351 Gr. CF8M
Disc Carrier Hanger Bolts (1)	A193 Gr. B8
Body / Cap Stud	A193 Gr. B8
Body / Cap Nut	A194 Gr.8
Identification Plate	Series 300 SST

DESIGN FEATURES:

- **Integral Seats**, however, renewable screwed-in seat rings are available on order.
- **Wall** thickness per API 603 requirements.
- **Swivel disc** for improved seat alignment and longer life.
- **Each** valve is shell and seat pressure tested per industry standard API 598.
- **Check** valve are suitable for service in horizontal line with cap vertical or in a vertical line with flow upward.
- **Carrier Pin** is confined within the body wall and is not accessible from the exterior reducing potential leak points.
- **End Flanges** have the following raised faces per ASME B16.5:
  Classes 150-300: 1/16" (2mm).
  Classes 600-1500: 1/4" (7mm).
- **Weld** ends are available per ASME B16.25 or per customer's specification.
- **Each** valve has a unique certification number that is traceable to the valve certification sheet which includes MTR data, pressure test, inspection result and certificate of conformance.
- **Thicker** walled API 600 design available.

(1) 10" Valve size and up have a hanger design as shown below.
(2) CF3M for weld end bodies.
(3) See pages 20-21 for 2" and smaller sizes with threaded or socket weld ends.

Design Specifications

Item	Applicable Specification
Wall thickness	API 603 & B16.34
Pressure - temperature ratings	ASME B16.34
General valve design	B16.34
End to End dimensions	ASME B16.10
Flange design	ASME B16.5
Butt Weld design	ASME B16.25
Materials	ASTM

- **Other** available options as follows:
  -Alternate valve materials such as chrome and stainless steel alloys
  -Alternate trim materials
  -Bypass, drain and other auxiliary connections
  -NACE service
  -Special cleaning for applications such as oxygen or chlorine
  -Other options available as specified

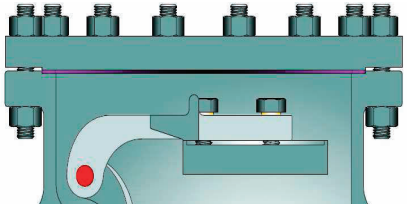

Valve design for valve sizes 10" and above all classes.

SWING CHECK VALVE DIMENSIONS (CLASS 150—600).

SIZE	ASME 150				ASME 300				ASME 600			
in / mm	A	B	C	D	A	B	C	D	A	B	C	D
½	4.25	2.2	2.4	0.50	6.00	2.2	2.4	0.50	6.50	2.3	2.4	0.50
13	108	55	61	13	152	55	61	13	165	58	61	13
¾	4.62	3.0	2.8	0.75	7.00	3.0	2.8	0.75	7.50	3.1	2.8	0.75
20	117	76	70	19	178	76	70	19	190	79	70	19
1	5.00	3.4	3.2	1.00	8.50	3.4	3.2	1.00	8.50	3.5	3.2	1.00
25	127	86	81	25	216	86	81	25	216	90	81	25
1½	6.50	4.1	4.2	1.50	9.50	4.1	4.2	1.50	9.50	4.3	4.2	1.50
38	165	103	106	38	241	103	106	38	241	108	106	38
2	8.00	4.6	4.6	2.00	10.50	4.6	4.6	2.00	11.50	5.4	6.5	2.00
50	203	116	117	51	267	116	117	51	292	138	165	51
2½	8.50	5.6	5.9	2.50	11.50	5.6	5.9	2.50	13.00	7.4	7.9	2.50
65	216	142	151	170	292	142	151	170	330	189	200	64
3	9.50	5.8	6.8	3.00	12.50	5.8	6.8	3.00	14.00	8.3	8.5	3.00
80	241	148	171	192	318	148	171	192	356	212	215	76
4	11.50	6.5	7.4	4.00	14.00	6.5	7.4	4.00	17.00	10.3	10.6	4.00
100	292	165	189	213	356	164	189	213	432	262	270	102
6	14.00	8.2	10.0	6.00	17.50	8.6	10.0	6.00	22.00	14.0	13.5	6.00
150	356	208	254	273	444	218	254	299	559	356	342	152
8	19.50	10.1	13.8	8.00	21.00	10.7	13.8	8.00	26.00	18.5	17.1	7.88
200	495	257	349	349	533	273	349	375	660	469	435	200
10	24.50	14.2	17.8	10.00	24.50	15.3	18.5	10.00	31.00	21.2	20.1	9.75
250	622	359	451	451	622	388	470	470	787	539	510	248
12	27.50	15.6	20.5	12.00	28.00	17.9	22.3	12.00	33.00	23.4	22.6	11.75
300	698	397	521	521	711	455	565	305	838	594	575	298
14	31.00	16.3	20.9	13.25	33.00	23.4	21.7	13.25	35.00	25.4	23.5	12.88
350	787	413	532	337	838	595	550	337	889	645	598	327
16	34.00	23.7	25.3	15.25	34.00	24.9	27.4	15.25	39.00	28.6	27.6	14.75
400	864	602	642	387	864	632	695	387	991	727	700	375
18	38.50	27.9	29.6	17.25	38.50	28.5	30.4	17.00	43.00	32.5	29.1	16.50
450	978	709	752	438	978	723	772	432	1092	826	740	419
20	38.50	26.7	27.0	19.25	40.00	24.9	29.1	19.00	47.00	31.6	32.3	18.25
500	978	679	685	489	1016	632	738	483	1194	802	820	464
24	51.00	33.5	36.0	23.25	53.00	34.8	37.6	23.00	55.00	40.2	39.4	22.00
600	1295	852	915	591	1346	884	955	584	1397	1020	1000	559

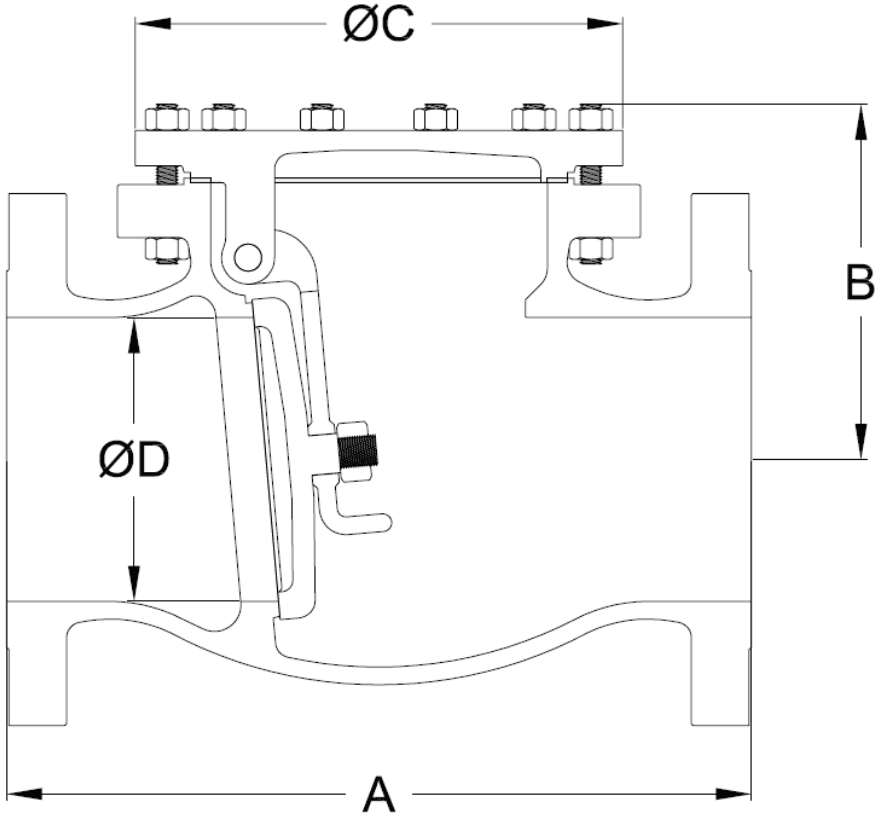

WE = Butt weld
FE = Flanged

B = Center to top

API 603 SWING CHECK VALVES
BOLTED BONNET, CLASSES 150-600
FLANGED AND BUTTWELD ENDS
CAST STAINLESS STEEL

SIZE	ASME 150							ASME 300							ASME 600						
in	F	in	WT	lb	WT	lb	C_V	F	in	WT	lb	WT	lb	C_V	F	in	WT	lb	WT	lb	C_V
mm		mm	FE	kg	WE	kg			mm	FE	kg	WE	kg			mm	FE	kg	WE	kg	
½	3.8		3.6		2.1		3.9	4.1		7.0		2.1		3.9	4.1		9.1		2.8		3.9
13	97		1.6		1.0			104		3.2		1.0			104		4.1		1.3		
¾	5.4		5.3		3.3		9.2	5.8		12.5		3.3		9.2	5.8		14.9		5.2		9.2
20	137		2.4		1.5			147		5.7		1.5			147		6.8		2.4		
1	6.2		7.5		4.9		17	6.3		18.0		4.9		17	6.5		23.8		6.6		17
25	157		3.4		2.2			160		8.2		2.2			165		10.8		3.0		
1½	7.3		14.6		10.6		40	7.5		30.0		10.6		40	7.8		40.0		14.5		40
38	185		6.6		4.8			191		13.6		4.8			198		18.1		6.6		
2	8.4		24.0		15.5		75	8.7		39.0		15.5		75	9.6		52.4		34.7		75
50	213		10.9		7.0			221		17.7		7.0			244		23.8		15.7		
2½	10.1		33		30		120	10.3		45		34		120	13.1		79		62		120
65	257		17		15			262		22		17			333		36		28		
3	11.0		38		37		175	11.2		73		52		175	14.8		110		79		175
80	279		19		18			284		36		26			376		50		36		
4	12.3		69		51		315	12.6		92		69		315	18.4		215		168		315
100	312		34		25			320		46		34			467		98		76		
6	15.9		119		94		760	16.2		172		124		760	23.8		439		335		760
150	404		59		46			411		85		61			605		199		152		
8	19.0		229		178		1390	19.7		365		273		1390	26.5		811		633		1350
200	483		113		88			500		180		135			673		368		287		
10	25.2		448		348		2175	25.8		759		577		2175	31.1		1343		1047		2070
250	640		221		172			655		375		285			790		609		475		
12	28.6		648		504		3250	30.1		1160		1077		3250	35.4		1702		1363		3120
300	726		320		249			765		526		488			899		772		618		
14	31.5		979		834		3960	37.0		1411		1241		3960	38.6		1958		1585		3740
350	800		444		378			940		640		563			980		888		719		
16	40.1		1438		1250		5250	42.3		1764		1550		5250	44.0		2994		2364		4910
400	1019		652		567			1074		800		703			1118		1358		1072		
18	47.2		1927		1656		6990	48.9		2578		2192		6790	50.7		3449		2932		6400
450	1199		874		751			1242		1169		994			1288		1564		1330		
20	49.4		1771		1522		8700	52.5		2913		2505		8480	53.1		4792		4121		7800
500	1255		803		690			1334		1321		1136			1349		2174		1869		
24	57.7		3559		3062		12700	60.4		5204		4428		12400	62.5		7608		6467		11400
600	1466		1614		1388			1534		2360		2008			1588		3451		2933		

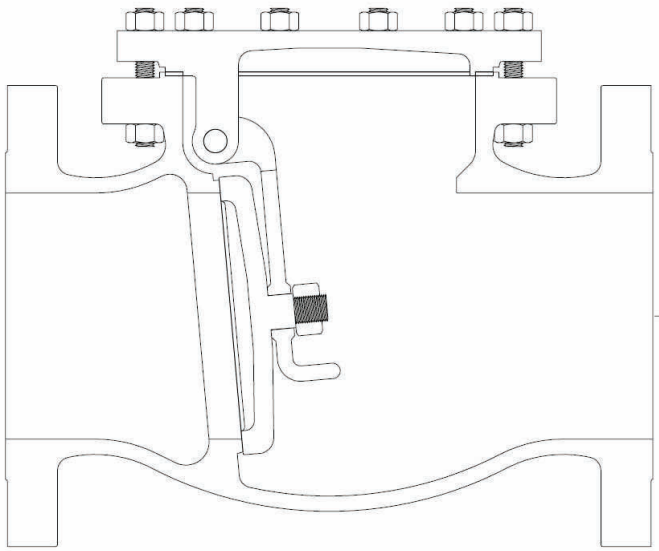

FE = Flanged ends
WE = Weld ends

F = Dismantling Dimension

WT = Weight
C_V = Flow coefficient

CRYOGENIC VALVES

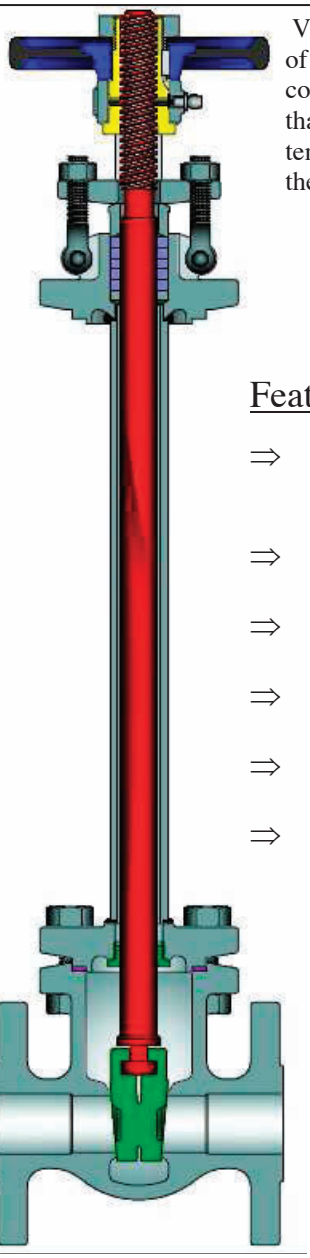

Cryogenic Gate Valve

Valves in cold service can present an engineering challenge because of the fragility of the packing at continuously low temperatures. To combat this, Powell Valves offers an assortment of cryogenic valves that all come standard with an extended bonnet and stem. These extensions help to keep the packing away from the low temperatures of the cryogenic fluid and thus function safely and efficiently.

Features:

⇒ All cryogenic valves are specially processed and carefully cleaned and degreased in specialized clean areas. They are then sealed to prevent contamination.

⇒ Cryogenic valves are offered in bronze or stainless steel and can serve in temperatures as low as –423° F.

⇒ Powell welcomes the development of custom designs needed to accommodate unique customer needs.

⇒ Extended bonnets and stems provide an adequate distance for the packing to maintain the safety, integrity and efficiency of the valve.

⇒ Powell also provides non-extended cryogenic valves, but recommends their use in only intermittent and non-extreme cold uses.

⇒ At the customers' request, Powell also offers bonnet chamber ventilation in order to prevent excess pressure build up caused by trapped cryogenic liquids.

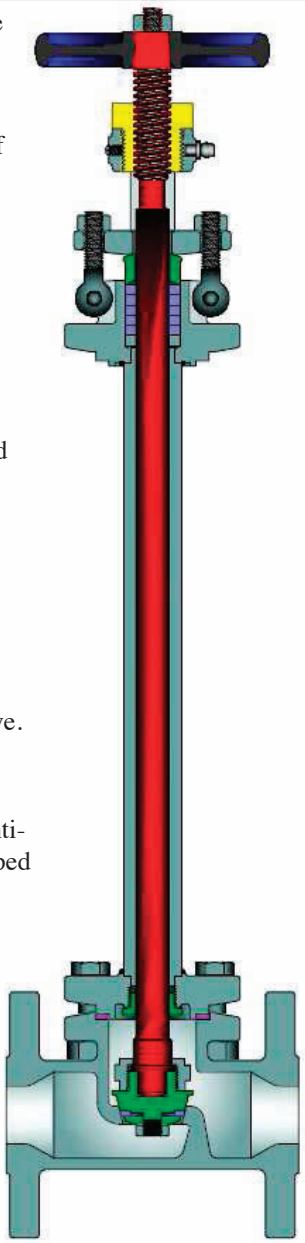

Cryogenic Globe Valve

The quality and benefits expected of all Powell valves are extended and preserved with its cryogenic line.

For more information, see Powell's Cryogenic catalog.

ACCESSORIES

GEAR ACTUATOR

Most Powell Multi-Turn Valves can be supplied with Adapto Gears. For installed Powell valves, gear units with adaptor parts are available. Adapto Gear units are also available separately for any Multi-Turn valve application.

Powell Adapto Gear Actuators are fully enclosed, light weight, maintenance free Bevel Gear units for valves which require gearing to facilitate operation. The actuators mount quickly and easily as installation does not require special complicated parts. The manual valve actuators, Type AA, B, and C, have been designed for simplicity, high efficiency and ease of adaptability to make them ideal for use on both small and large valves. The input shaft is mounted on antifriction bearings and the bevel gear drive sleeve is supported by an integral bearing arrangement. The actuator does not take any of the valve stem thrust since the thrust is absorbed in the valve stem bushing.

Typical Adapto-Gear Installation:

a. Remove the handwheel.
b. Remove bolts from the yoke, mount the adaptor, replace bolts and tighten.
c. Install the sleeve and key on stem bushing.
d. Mount gear operator on adaptor and bolt together.
e. Conversion is completed.

For installed valves, adaptors are provided so that new stem bushings or bonnets are not necessary. Field conversion can be completed without removing the valve from service.

ADVANTAGES

- Anti-friction bearings permits ease of operation.
- Housing protects gears from dirt, dust, and other foreign materials. Also good as a safety factor to protect operating personnel.
- Housing has provision for plug or pipe stem protector when required. Sealed housing retains the lubricant and protects the moving parts.
- Adaptors for air wrench operation can be supplied on order.

MODEL AA-18 ACTUATOR

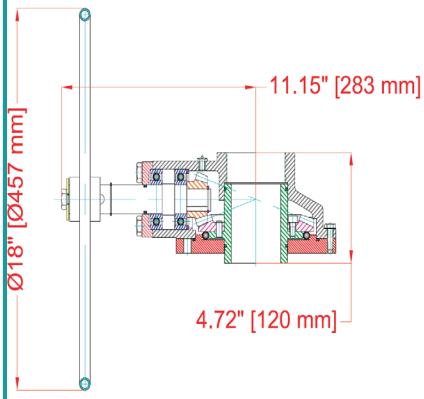

Max Torque: 996 ft-lb [1350 Nm]
Gear Ratio: 2.92:1

MODEL B-24 ACTUATOR

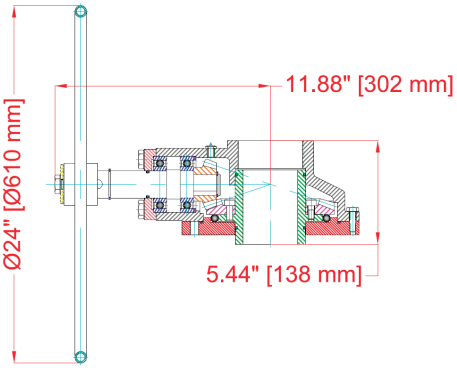

Max Torque: 1990 ft-lb [2700 Nm]
Gear Ratio: 4.07:1

MODEL C-24 ACTUATOR

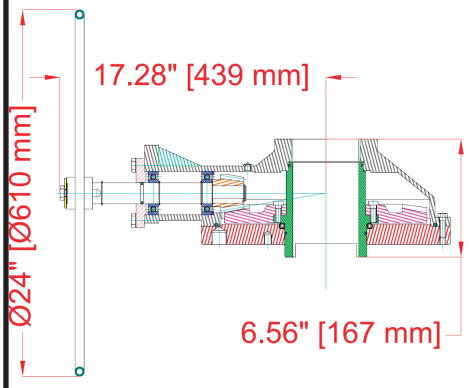

Max Torque: 3980 ft-lb [5400 Nm]
Gear Ratio: 6:1

ACCESSORIES cont...

MOTOR ACTUATOR

Most Powell Valves can be furnished with electric motor actuators. This type of equipment gives fast, safe, efficient operation of any valve by means of a push button locally or from a remote point, or automatically from a limit switch, pressure switch or other similar device.

To enable Powell to quote accurately on Motor Actuated Valves, please provide the following complete information:

A. Valve Size and Figure Number

B. Media

C. Media Pressure and Temperature

D. Differential Pressure against which the valve must open and close and Line Pressure if different from differential pressure.

E. Opening or Closing Time Requirements. Unless specified - gate valve stem speed is 12" per minute (approx.) and globe valve stem speed is 4" per minute (approx.).

F. Voltage, Frequency and Number of Phases

G. Special Features (e.g. control station requirements, special enclosure types, etc.)

ACCESSORIES cont...

HYDRAULIC OR PNEUMATIC ACTUATOR

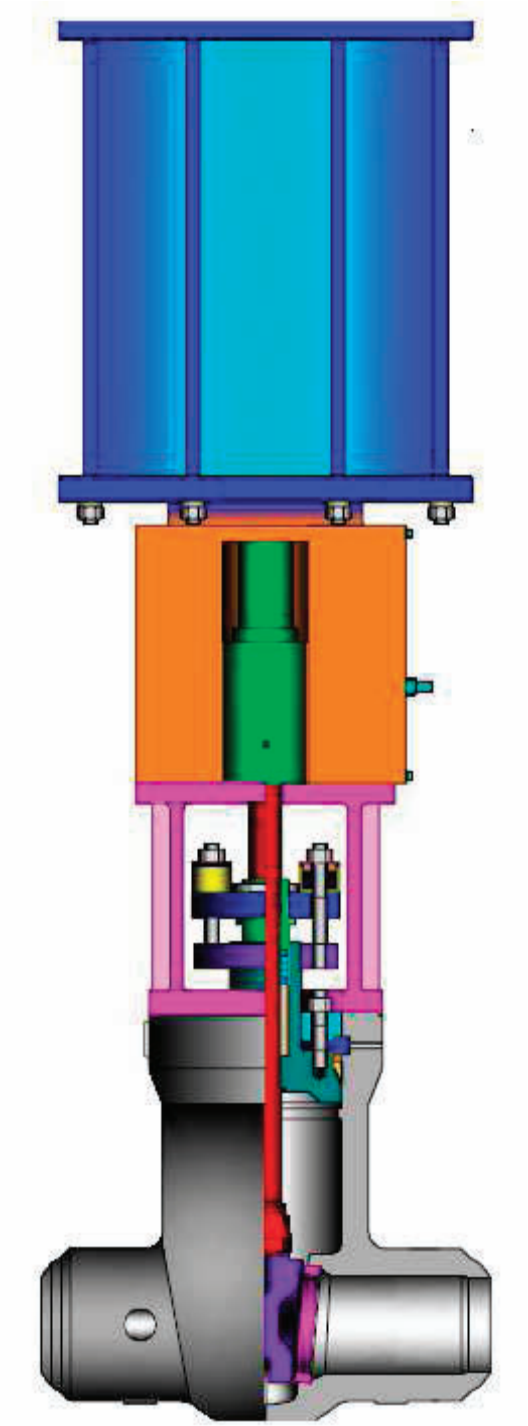

Most Powell Valves can be equipped with Hydraulic or Pneumatic Actuators for automatic or remote opening and closing.

When ordering such valves, please provide the following information:

A. Valve Size and Figure Number

B. Media

C. Media Pressure and Temperature

D. Differential Pressure against which the valve must open and close and Line Pressure if different from differential pressure.

E. Opening or Closing Time Requirements

F. Actuator Media Pressure - Min./Max.

G. Failure Position (open, close, or as is)

H. Special Features (e.g. limit switches, manual override, etc.)

I. Environmental Temperature Range - Min./Max.

ACCESSORIES cont...

LIMIT SWITCH

Powell Valves can be equipped with Limit Switches to signal users when the valve is in the fully open and fully closed position. This can help reduce extraneous wear caused by forcing the wedge or disc farther into the seat rings or back seat after the valve is already in the fully open or fully closed position. Limit Switches can also be used for fully automated valve operation in conjunction with motor, hydraulic, or pneumatic actuators.

NOTE: The installation of a limit switch may require further machining or more parts added to the valve.
Typical installation on handwheel operated valves.

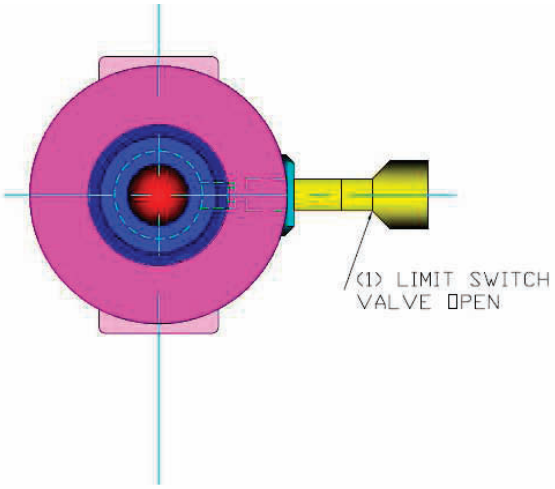

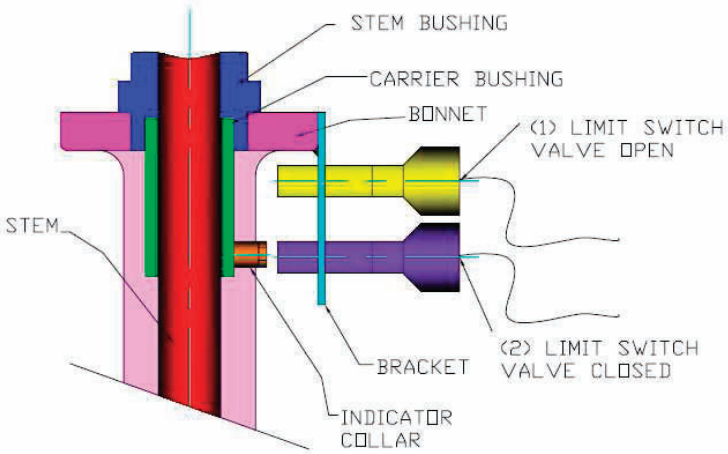

ENGINEERING DATA INDEX

	PAGE
VALVE STANDARDS AND RELATED INFORMATION	31
PRESSURE/TEMPERATURE RATINGS	32-37
CHEMICAL AND PHYSICAL PROPERTIES	38
TRIM DESCRIPTIONS	39
SOCKET WELD END DIMENSIONS	40
DIMENSIONS OF WROUGHT STEEL PIPE AND WELD END CONFIGURATIONS	41-46
STEEL VALVE FLANGE DIMENSIONS	47-49
METHOD OF DESIGNATING LOCATION OF AUXILIARY CONNECTIONS	50
FLOW DESIGN AND MAINTENANCE RECOMMENDATIONS	51
CONVERSION DATA AND EQUIVALENTS	52-53

NOTE: DATA PROVIDED IN THIS SECTION IS FOR REFERENCE PURPOSES AND IS SUBJECT TO CHANGE. CONSULT CURRENT STANDARDS AND SPECIFICATIONS FOR THE LATEST DATA AND FOR SPECIFIC DETAILS WHICH MAY BE BEYOND THE SCOPE OF THIS CATALOG.

VALVE STANDARDS AND RELATED INFORMATION

1. Steel and Corrosion Resistant Designs

(A) ASME B16.34 → Valves – Flanged, Threaded, and Welded End

This is the basic ASME valve standard for steel and corrosion resistant alloys. This standard contains requirements such as minimum shell wall thickness, pressure/temperature ratings, and pressure testing requirements.

(B) API 603 → Corrosion-resistant, Bolted Bonnet Gate Valves—Flanged and Butt-welding Ends

This is the basic API valve standard and contains wall thicknesses that are equal to ASME B16.34 for bolted bonnet valves. This standard refers to B16.34 for pressure/temperature ratings.

(C) API Standard 598 → Valve Inspection and Testing

This standard is referenced by API 603 and contains minimum inspection and pressure test requirements.

(D) ASME B16.5 → Pipe Flanges and Flanged Fittings

(E) ASME B16.10 → Face to Face and End to End Dimensions of Valves

(F) ASME B16.25 → Buttwelding Ends

(G) API 600 → Steel Gate Valve Flanged and Butt Welded Ends, Bolted and Pressure Seal Bonnets

2. Powell Publications and Miscellaneous Information

The *Handbook of Valve Information* contains valve selection, storage, installation, operation, and maintenance information for all Powell Valves.

NOTE: Prior to any installation or maintenance, appropriate precautions must be followed. For example, all pressure must be relieved from the valve and affected piping prior to servicing and proper protective clothing and equipment must be worn.

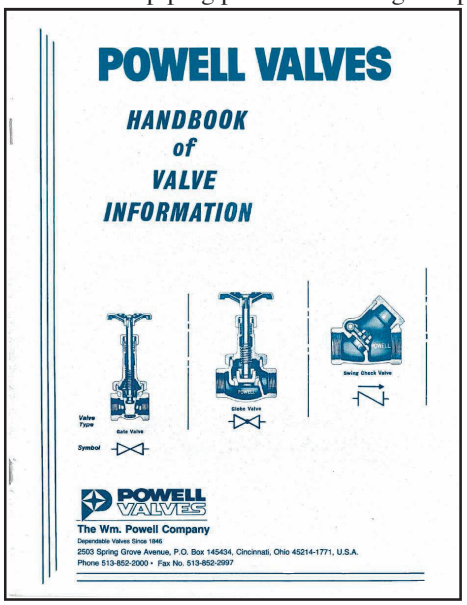

PRESSURE/TEMPERATURE RATINGS

TABLE 1

ASTM A351 Grade CF3M (316L) (a)
ASTM A351 Grade CF8M (316) (b)
ASTM A351 Grade CG3M (317L) (a)
ASTM A351 Grade CG8M (317) (c)

(a) Not to be used over 850° F.
(b) At temperatures over 1000º F, use only when the carbon content is 0.04% or higher. This requirement must be specified by customer when applicable.
(c) Not to be used over 1000° F.

STANDARD CLASS

	Working Pressures by Classes, psig							
Temperature, ºF	150	200	300	600	900	1500	2500	4500
-20 to 100 (1)	275	400	720	1,440	2,160	3,600	6,000	10,800
200	235	360	620	1,240	1,860	3,095	5,160	9,290
300	215	330	560	1,120	1,680	2,795	4,660	8,390
400	195	300	515	1,025	1,540	2,570	4,280	7,705
500	170	270	480	955	1,435	2,390	3,980	7,165
600	140	240	450	900	1,355	2,255	3,760	6,770
650	125	230	440	885	1,325	2,210	3,680	6,625
700	110	215	435	870	1,305	2,170	3,620	6,515
750	95	205	425	855	1,280	2,135	3,560	6,410
800	80	190	420	845	1,265	2,110	3,520	6,335
850	65	180	420	835	1,255	2,090	3,480	6,265
900	50	170	415	830	1,245	2,075	3,460	6,230
950	35	150	385	775	1,160	1,930	3,220	5,795
1,000	20	130	365	725	1,090	1,820	3,030	5,450
1,050	20(2)	125	360	720	1,080	1,800	3,000	5,400
1,100	20(2)	115	305	610	915	1,525	2,545	4,575
1,150	20(2)	90	235	475	710	1,185	1,970	3,550
1,200	20(2)	75	185	370	555	925	1,545	2,775
1,250	20(2)	60	145	295	440	735	1,230	2,210
1,300	20(2)	50	115	235	350	585	970	1,750
1,350	20(2)	45	95	190	290	480	800	1,440
1,400	20(2)	35	75	150	225	380	630	1,130
1,450	20(2)	30	60	115	175	290	485	875
1,500	15(2)	25	40	85	125	205	345	620

NOTE: (1) The rating at –20° F extends down to –423° F for cryogenic valves.
(2) For welded end valves only. Flanged end ratings terminate at 1000° F.

SPECIAL CLASS

	Working Pressures by Classes, psig						
Temperature, ºF	150	300	600	900	1500	2500	4500
-20 to 100 (1)	290	750	1,500	2,250	3,750	6,250	11,250
200	265	690	1,380	2,075	3,455	5,760	10,365
300	240	625	1,250	1,870	3,120	5,200	9,360
400	220	575	1,145	1,720	2,865	4,775	8,600
500	205	535	1,065	1,600	2,665	4,440	7,995
600	195	505	1,005	1,510	2,520	4,195	7,555
650	190	495	985	1,480	2,465	4,105	7,395
700	185	485	970	1,455	2,425	4,040	7,270
750	185	475	955	1,430	2,385	3,975	7,150
800	180	470	945	1,415	2,355	3,930	7,070
850	180	465	930	1,400	2,330	3,885	6,990
900	180	465	925	1,390	2,315	3,860	6,950
950	175	460	915	1,375	2,290	3,815	6,870
1,000	160	420	840	1,260	2,105	3,505	6,310
1,050	160	420	840	1,260	2,105	3,505	6,310
1,100	145	380	765	1,145	1,905	3,180	5,720
1,150	115	295	590	885	1,480	2,465	4,435
1,200	90	230	465	695	1,155	1,930	3,470
1,250	70	185	370	555	920	1,535	2,765
1,300	55	145	290	435	730	1,215	2,185
1,350	45	120	240	360	600	1,000	1,800
1,400	35	95	190	285	470	785	1,415
1,450	30	75	145	220	365	605	1,095
1,500	20	50	105	155	260	430	770

NOTE: Special Class Ratings apply to Threaded and Weld End Valves only and require upgrading per paragraph 8 of ASME B16.34

PRESSURE/TEMPERATURE RATINGS

TABLE 2

ASTM A351 Grade CF3 (304L) (a)
ASTM A351 Grade CF8 (304) (b)

(a) Not to be used over 800° F.
(b) At temperatures over 1000º F, use only when the carbon content is 0.04% or higher. This requirement must be specified by customer when applicable.

STANDARD CLASS

	Working Pressures by Classes, psig						
Temperature, ºF	150	300	600	900	1500	2500	4500
-20 to 100	275	720	1,440	2,160	3,600	6,000	10,800
200	230	600	1,200	1,800	3,000	5,000	9,000
300	205	540	1,075	1,615	2,690	4,480	8,065
400	190	495	995	1,490	2,485	4,140	7,450
500	170	465	930	1,395	2,330	3,880	6,985
600	140	440	885	1,325	2,210	3,680	6,625
650	125	430	865	1,295	2,160	3,600	6,480
700	110	420	845	1,265	2,110	3,520	6,335
750	95	415	825	1,240	2,065	3,440	6,190
800	80	405	810	1,215	2,030	3,380	6,085
850	65	395	790	1,190	1,980	3,300	5,940
900	50	390	780	1,165	1,945	3,240	5,830
950	35	380	765	1,145	1,910	3,180	5,725
1,000	20	355	710	1,065	1,770	2,950	5,315
1,050	20(1)	325	650	975	1,630	2,715	4,885
1,100	20(1)	255	515	770	1,285	2,145	3,855
1,150	20(1)	205	410	615	1,030	1,715	3,085
1,200	20(1)	165	330	495	825	1,370	2,470
1,250	20(1)	135	265	400	670	1,115	2,005
1,300	20(1)	115	225	340	565	945	1,695
1,350	20(1)	95	185	280	465	770	1,390
1,400	20(1)	75	150	225	380	630	1,130
1,450	20(1)	60	115	175	290	485	875
1,500	15(1)	40	85	125	205	345	620

NOTE: (1) For welded end valves only. Flanged end ratings terminate at 1000° F.

SPECIAL CLASS

	Working Pressures by Classes, psig						
Temperature, ºF	150	300	600	900	1500	2500	4500
-20 to 100	290	750	1,500	2,250	3,750	6,250	11,250
200	255	670	1,340	2,010	3,350	5,580	10,045
300	230	600	1,200	1,800	3,000	5,000	9,000
400	215	555	1,110	1,665	2,770	4,620	8,315
500	200	520	1,040	1,560	2,600	4,330	7,795
600	190	495	985	1,480	2,465	4,105	7,395
650	185	480	965	1,445	2,410	4,020	7,230
700	180	470	945	1,415	2,355	3,930	7,070
750	175	460	920	1,380	2,305	3,840	6,910
800	175	455	905	1,360	2,265	3,770	6,790
850	170	440	885	1,325	2,210	3,685	6,630
900	165	435	870	1,300	2,170	3,615	6,510
950	165	425	850	1,280	2,130	3,550	6,390
1,000	160	415	830	1,245	2,075	3,460	6,230
1,050	155	405	815	1,220	2,035	3,395	6,105
1,100	125	320	645	965	1,605	2,680	4,820
1,150	100	255	515	770	1,285	2,145	3,855
1,200	80	205	410	615	1,030	1,715	3,085
1,250	65	165	335	500	835	1,395	2,505
1,300	55	140	285	425	705	1,180	2,120
1,350	45	115	230	345	580	965	1,735
1,400	35	95	190	285	470	785	1,415
1,450	30	75	145	220	365	610	1,095
1,500	20	50	105	155	260	430	770

NOTE: Special Class Ratings apply to Threaded and Weld End Valves only and require upgrading per paragraph 8 of ASME B16.34

PRESSURE/TEMPERATURE RATINGS

TABLE 3 **ASTM A351 Grade CF8C (347)**

At temperatures over 1000° F, use only when the carbon content is 0.04% or higher. This requirement must be specified by customer when applicable.

STANDARD CLASS

Working Pressures by Classes, psig							
Temperature, °F	150	300	600	900	1500	2500	4500
-20 to 100	275	720	1,440	2,160	3,600	6,000	10,800
200	255	660	1,325	1,985	3,310	5,520	9,935
300	230	615	1,235	1,850	3,085	5,140	9,250
400	200	575	1,150	1,730	2,880	4,800	8,640
500	170	540	1,085	1,625	2,710	4,520	8,135
600	140	515	1,030	1,550	2,580	4,300	7,740
650	125	505	1,015	1,520	2,530	4,220	7,595
700	110	495	995	1,490	2,485	4,140	7,450
750	95	490	985	1,475	2,460	4,100	7,380
800	80	485	975	1,460	2,435	4,060	7,310
850	65	485	970	1,455	2,425	4,040	7,270
900	50	450	900	1,350	2,245	3,745	6,740
950	35	385	775	1,160	1,930	3,220	5,795
1,000	20	365	725	1,090	1,820	3,030	5,450
1,050	20(1)	360	720	1,080	1,800	3,000	5,400
1,100	20(1)	310	625	935	1,560	2,600	4,680
1,150	20(1)	210	420	625	1,045	1,745	3,135
1,200	20(1)	150	300	455	755	1,255	2,265
1,250	20(1)	115	225	340	565	945	1,695
1,300	20(1)	75	150	225	375	630	1,130
1,350	20(1)	50	105	155	255	430	770
1,400	15(1)	40	80	125	205	345	615
1,450	10(1)	30	60	95	155	255	465
1,500	10(1)	25	55	80	135	230	410

NOTE: (1) For welded end valves only. Flanged end ratings terminate at 1000° F.

SPECIAL CLASS

Working Pressures by Classes, psig							
Temperature, °F	150	300	600	900	1500	2500	4500
-20 to 100	290	750	1,500	2,250	3,750	6,250	11,250
200	275	715	1,435	2,150	3,585	5,975	10,750
300	255	660	1,320	1,975	3,295	5,490	9,885
400	240	620	1,245	1,865	3,105	5,180	9,320
500	230	600	1,200	1,800	3,000	5,000	9,000
600	220	575	1,150	1,730	2,880	4,800	8,640
650	215	565	1,130	1,695	2,825	4,710	8,480
700	215	555	1,110	1,665	2,770	4,620	8,315
750	210	550	1,100	1,645	2,745	4,575	8,235
800	210	545	1,090	1,630	2,720	4,530	8,155
850	205	540	1,080	1,625	2,705	4,510	8,115
900	205	540	1,080	1,625	2,705	4,510	8,115
950	180	470	945	1,415	2,360	3,930	7,070
1,000	160	420	840	1,260	2,105	3,505	6,310
1,050	160	420	840	1,260	2,105	3,505	6,310
1,100	150	390	780	1,170	1,950	3,250	5,850
1,150	100	260	525	785	1,305	2,180	3,920
1,200	70	190	375	565	945	1,570	2,830
1,250	55	140	285	425	705	1,180	2,120
1,300	35	95	190	285	470	785	1,415
1,350	25	65	130	195	320	535	965
1,400	20	50	105	155	255	430	770
1,450	15	40	75	115	195	320	580
1,500	15	35	70	105	170	285	515

NOTE: Special Class Ratings apply to Threaded and Weld End Valves only and require upgrading per paragraph 8 of ASME B16.34

PRESSURE/TEMPERATURE RATINGS

TABLE 4 **ASTM A351 Grade CN7M (Alloy 20)**

STANDARD CLASS

Working Pressures by Classes, psig							
Temperature, °F	150	300	600	900	1500	2500	4500
-20 to 100	230	600	1,200	1,800	3,000	5,000	9,000
200	200	520	1,035	1,555	2,590	4,320	7,775
300	180	465	930	1,395	2,330	3,880	6,985
400	160	420	845	1,265	2,110	3,520	6,335
500	150	390	780	1,165	1,945	3,240	5,830
600	140	360	720	1,080	1,800	3,000	5,400

SPECIAL CLASS

Working Pressures by Classes, psig							
Temperature, °F	150	300	600	900	1500	2500	4500
-20 to 100	255	665	1,330	1,995	3,320	5,535	9,965
200	215	560	1,125	1,685	2,805	4,680	8,420
300	195	510	1,020	1,535	2,550	4,260	7,665
400	180	470	945	1,415	2,355	3,930	7,070
500	165	435	870	1,300	2,170	3,615	6,510
600	155	400	805	1,205	2,010	3,350	6,025

NOTE: Special Class Ratings apply to Threaded End Valves only and require upgrading per paragraph 8 of ASME B16.34

PRESSURE/TEMPERATURE RATINGS

TABLE 5 **ASTM A494 Grade M35-1 (Monel)**

STANDARD CLASS

Working Pressures by Classes, psig							
Temperature, °F	150	300	600	900	1500	2500	4500
-20 to 100	230	600	1,200	1,800	3,000	5,000	9,000
200	200	525	1,050	1,575	2,630	4,380	7,885
300	190	490	980	1,470	2,450	4,080	7,345
400	180	475	945	1,420	2,365	3,940	7,090
500	170	475	945	1,420	2,365	3,940	7,090
600	140	475	945	1,420	2,365	3,940	7,090
650	125	475	945	1,420	2,365	3,940	7,090
700	110	470	940	1,410	2,350	3,920	7,055
750	95	465	930	1,395	2,330	3,880	6,985
800	80	460	915	1,375	2,290	3,820	6,875
850	65	375	755	1,130	1,885	3,145	5,655
900	50	275	550	825	1,370	2,285	4,115

SPECIAL CLASS

Working Pressures by Classes, psig							
Temperature, °F	150	300	600	900	1500	2500	4500
-20 to 100	255	670	1,340	2,010	3,350	5,580	10,045
200	225	585	1,175	1,760	2,935	4,890	8,800
300	210	545	1,095	1,640	2,730	4,555	8,195
400	200	530	1,055	1,585	2,640	4,395	7,915
500	200	530	1,055	1,585	2,640	4,395	7,915
600	200	530	1,055	1,585	2,640	4,395	7,915
650	200	530	1,055	1,585	2,640	4,395	7,915
700	200	525	1,050	1,575	2,625	4,375	7,875
750	200	520	1,040	1,560	2,600	4,330	7,795
800	195	510	1,025	1,535	2,560	4,265	7,675
850	180	470	945	1,415	2,355	3,930	7,070
900	130	345	685	1,030	1,715	2,855	5,145

NOTE: Special Class Ratings apply to Threaded and Weld End Valves only and require upgrading per paragraph 8 of ASME B16.34

PRESSURE/TEMPERATURE RATINGS

TABLE 6

ASTM A494 Grade CW-12MW (Hastelloy C)

Not to be used over 1000° F. Material to be in the solution annealed condition.

STANDARD CLASS

Working Pressures by Classes, psig							
Temperature, °F	150	300	600	900	1500	2500	4500
-20 to 100	230	600	1,200	1,800	3,000	5,000	9,000
200	210	550	1,105	1,655	2,760	4,600	8,280
300	200	520	1,040	1,560	2,605	4,340	7,810
400	190	490	980	1,470	2,450	4,080	7,345
500	170	465	925	1,390	2,315	3,860	6,950
600	140	440	880	1,320	2,195	3,660	6,590
650	125	430	860	1,290	2,150	3,580	6,445
700	110	420	835	1,255	2,090	3,480	6,265
750	95	410	820	1,230	2,050	3,420	6,155
800	80	400	800	1,200	2,005	3,340	6,010
850	65	395	785	1,180	1,970	3,280	5,905
900	50	385	775	1,160	1,930	3,220	5,795
950	35	380	760	1,140	1,895	3,160	5,690
1,000	20	365	725	1,090	1,820	3,030	5,450

SPECIAL CLASS

Working Pressures by Classes, psig							
Temperature, °F	150	300	600	900	1500	2500	4500
-20 to 100	255	670	1,340	2,010	3,350	5,580	10,045
200	235	615	1,230	1,850	3,080	5,135	9,040
300	225	580	1,165	1,745	2,905	4,845	8,720
400	210	545	1,095	1,640	2,730	4,555	8,195
500	200	515	1,035	1,550	2,585	4,310	7,755
600	190	490	980	1,470	2,450	4,085	7,355
650	185	480	960	1,440	2,395	3,995	7,190
700	180	465	930	1,400	2,330	3,885	6,990
750	175	460	915	1,375	2,290	3,815	6,870
800	170	445	895	1,340	2,235	3,730	6,710
850	170	440	880	1,320	2,195	3,660	6,590
900	165	430	865	1,295	2,155	3,595	6,470
950	160	425	845	1,270	2,115	3,525	6,350
1,000	160	415	830	1,245	2,075	3,460	6,230

NOTE: Special Class Ratings apply to Threaded and Weld End Valves only and require upgrading per paragraph 8 of ASME B16.34

CHEMICAL AND PHYSICAL PROPERTIES
CAST STAINLESS STEELS AND NICKEL ALLOYS

TABLE 7

ASTM STANDARD GRADE TYPE		A351 CF3 304L	A351 CF8 304	A351 CF3M 316L	A351 CF8M 316	A351 CN7M Alloy20	A351 CG3M 317L	A351 CG8M 317	A351 CF8C 347	A494 M35-1 Monel	A494 CW12MW Hast.C
CARBON (C)	(Min)	-	-	-	-	-	-	-	-	-	-
	(Max)	0.03	0.08	0.03	0.08	0.07	0.03	0.08	0.08	0.35	0.12
MANGANESE (Mn)	(Min)	-	-	-	-	-	-	-	-	-	-
	(Max)	1.50	1.50	1.50	1.50	1.50	1.50	1.50	1.50	1.50	1.00
PHOSPHOROUS (P)	(Min)	-	-	-	-	-	-	-	-	-	-
	(Max)	0.040	0.040	0.040	0.040	0.040	0.04	0.04	0.040	0.03	0.040
SULFUR (S)	(Min)	-	-	-	-	-	-	-	-	-	-
	(Max)	0.040	0.040	0.040	0.040	0.040	0.04	0.04	0.040	0.03	0.030
SILICON (Si)	(Min)	-	-	-	-	-	-	-	-	-	-
	(Max)	2.00	2.00	1.50	1.50	1.50	1.50	1.50	2.00	1.25	1.00
COPPER (Cu)	(Min)	-	-	-	-	3.0	-	-	-	26.0	-
	(Max)	-	-	-	-	4.0	-	-	-	33.0	-
NICKEL (Ni)	(Min)	8.0	8.0	9.0	9.0	27.5	9.0	9.0	9.0		
	(Max)	12.0	11.0	13.0	12.0	30.5	13.0	13.0	12.0	Balance	Balance
CHROMIUM (Cr)	(Min)	17.0	18.0	17.0	18.0	19.0	18.0	18.0	18.0	-	15.5
	(Max)	21.0	21.0	21.0	21.0	22.0	21.0	21.0	21.0	-	17.5
MOLYBDENUM (Mo)	(Min)	-	-	2.0	2.0	2.0	3.0	3.0	-	-	16.0
	(Max)	0.50	0.50	3.0	3.0	3.0	4.0	4.0	0.50	-	18.0
VANADIUM (V)	(Min)	-	-	-	-	-	-	-	-	-	0.20
	(Max)	-	-	-	-	-	-	-	-	-	0.40
TUNGSTEN (W)	(Min)	-	-	-	-	-	-	-	-	-	3.75
	(Max)	-	-	-	-	-	-	-	-	-	5.25
COLUMBIUM (Cb)	(Min)	-	-	-	-	-	-	-	-	-	-
	(Max)	-	-	-	-	-	-	-	***	0.5	-
IRON (Fe)	(Min)	-	-	-	-	-	-	-	-	-	4.5
	(Max)	-	-	-	-	-	-	-	-	3.50	7.5
TENSILE STRENGTH	(Min)	70 Ksi	70 Ksi	70 Ksi	70 Ksi	62 Ksi	75 Ksi	75 Ksi	70 Ksi	65 Ksi	72 Ksi
YIELD STRENGTH	(Min)	30 Ksi	30 Ksi	30 Ksi	30 Ksi	25 Ksi	35 Ksi	35 Ksi	30 Ksi	25 Ksi	40 Ksi
ELONGATION	(Min)	35%	35%	30%	30%	35%	25%	25%	30%	25%	4%
TEMPERATURE	(Min)**	-425F	-425F	-425F	-425F	-325F	-425F	-425F	-425F	-325F	-325F
	(Max)	800F	1500F*	850F	1500F*	600F	850F	1500F*	1500F*	900F	1000F

*For temperatures over 1000° F, minimum CARBON is 0.04. Customer must specify if temperature is over 1000° F and this minimum CARBON is required.

**For temperature below -50° F Special cryogenic cleaning may be required. For temperatures below -100° F, special cryogenic extensions may be required. See Cryogenic section of catalog for more information.

***COLUMBIUM content of not less than 8 times the CARBON content, but not over 1.00%.

NOTE: Chemical Compositions Are In Units Of Percent

TRIM DESCRIPTIONS

TABLE 8

API Trim No.	Powell Trim Designation	Seat Nominal Description	Seat Nominal Composition	Nominal Hardness (HB)	Typical Stem/ Backseat Material
1	1	F6	13 Cr	250 min (a)	TYPE 410 or 420 (13Cr)
2	E	304	18Cr-8Ni	-	TYPE 304 (18Cr-8Ni)
5	5	Hardfaced	Co-CrA (b)	350	TYPE 410 or 420 (13 Cr)
8	8	F6 and	13 Cr.	250	TYPE 410 or 420 (13 Cr)
		Hardfaced	Co-CrA (b)	350	
9	9	Monel	Ni-Cu Alloy	-	Monel (Ni-Cu)
10	0	316	18 Cr-8Ni-Mo	-	TYPE 316 (18Cr-8Ni-Mo)
11	D	Monel and	Ni-Cu Alloy	-	Monel (Ni-Cu)
		Hardfaced	Co-CrA (b)	350	
12	2	316 and	18Cr-8Ni-Mo	-	TYPE 316 (18Cr-8Ni-Mo)
		Hardfaced	Co-CrA (b)	350	
13	3	Alloy 20	19Cr-29Ni	-	Alloy 20 (19Cr-29Ni)
14	4	Alloy 20 and	19Cr-29Ni	-	Alloy 20 (19Cr-29Ni)
		Hardfaced	Co-CrA (b)	350	
15	U	Hardfaced	Co-Cr-A(b)	350	TYPE 304 (18Cr-8Ni)
16	6	Hardfaced	Co-Cr-A(b)	350	TYPE 316 (18Cr-8Ni-Mo)
17	7	Hardfaced	Co-Cr-A(b)	350	TYPE 347(18Cr-10Ni-Cb)
18	J	Hardfaced	Co-Cr-A(b)	350	Alloy 20 (19Cr-29Ni)
Integral ½HF	A	Equal to Body	Equal to Body	-	Equal to Body
		Hardfaced	Co-CrA (b)	-	
Integral Full HF	B	Hardfaced	Hardfaced	-	Equal to Body
Integral	C	Equal to Body	Equal to Body	-	Equal to Body

(a) Minimum 50HB differential hardness between mating seating surfaces

(b) Stellite 6 ™ or equal.

SOCKET WELD END DIMENSIONS

TABLE 9

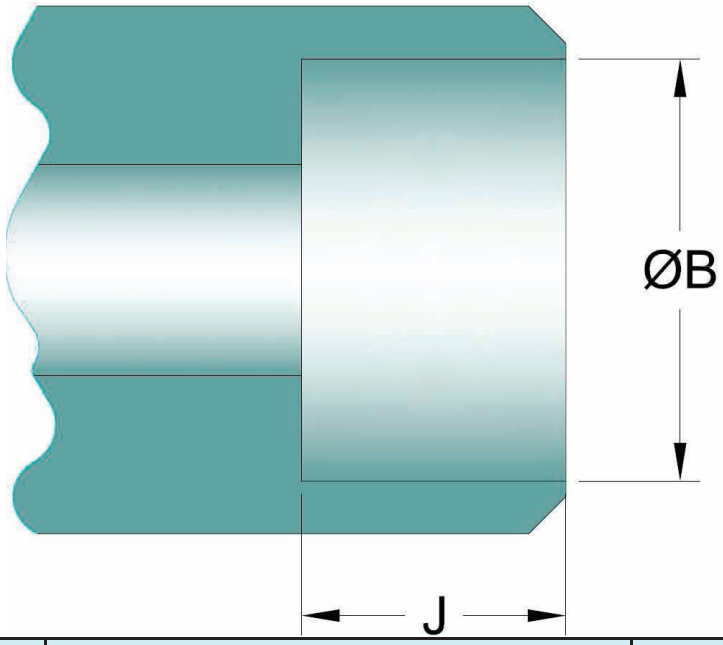

Data taken from tables 1 and I1 in ASME B16.11

Size	English (in)			Metric (mm)		
	Socket Bore Diameter (B)	Max / Min	Depth of Socket (J)	Socket Bore Diameter (B)	Max / Min	Depth of Socket (J)
¼	0.575		0.38	14.6		9.5
	0.555			14.2		
⅜	0.710		0.38	18.0		9.5
	0.690			17.6		
½	0.875		0.38	22.2		9.5
	0.855			21.8		
¾	1.085		0.50	27.6		12.5
	1.065			27.2		
1	1.350		0.50	34.3		12.5
	1.330			33.9		
1¼	1.695		0.50	43.1		12.5
	1.675			42.7		
1½	1.935		0.50	49.2		12.5
	1.915			48.8		
2	2.426		0.62	61.7		16.0
	2.406			61.2		

NOTE: Powell reserves the right to convert threaded ends to socket weld, which will result in thread remnants as pipe stop.

DIMENSIONS OF WROUGHT STEEL PIPE AND WELD END CONFIGURATIONS

TABLE 10

PIPE DIMENSIONS			IDENTIFICATION		WELD END DIMENSIONS*		
INCH NOMINAL SIZE	OUTSIDE DIAMETER IN.	WALL THICKNESS IN.	SCHEDULE		VALVE OD A IN.	PIPE ID B IN.	C IN.
¼	0.540	0.065	….	10/10S		0.410	
	0.540	0.088	STD	40/40S		0.364	
	0.540	0.119	XS	80/80S		0.302	
⅜	0.675	0.065	….	10/10S		0.545	
	0.675	0.091	STD	40/40S		0.493	
	0.675	0.126	XS	80/80S		0.423	
½	0.840	0.083	….	10/10S		0.674	
	0.840	0.109	STD	40/40S		0.622	
	0.840	0.147	XS	80/80S		0.546	
¾	1.050	0.083	….	10/10S		0.884	
	1.050	0.113	STD	40/40S		0.824	
	1.050	0.154	XS	80/80S		0.742	
1	1.315	0.109	….	10/10S		1.097	
	1.315	0.133	STD	40/40S		1.049	
	1.315	0.179	XS	80/80S		0.957	
1¼	1.660	0.109	…	10/10S		1.442	
	1.660	0.140	STD	40/40S		1.380	
	1.660	0.191	XS	80/80S		1.278	
1½	1.900	0.109	….	10/10S		1.682	
	1.900	0.145	STD	40/40S		1.610	
	1.900	0.200	XS	80/80S		1.500	
2	2.375	0.109	….	10/10S		2.157	
	2.375	0.154	STD	40/40S		2.067	
	2.375	0.218	XS	80/80S		1.939	
2½	2.875	0.120	….	10/10S	2.96	2.635	
	2.875	0.203	STD	40/40S	2.96	2.469	2.479
	2.875	0.276	XS	80/80S	2.96	2.323	2.351
	2.875	0.375	….	160	2.96	2.125	2.178
	2.875	0.552	XXS	….	2.96	1.771	1.868
3	3.500	0.120	….	10/10S	3.59	3.260	
	3.500	0.216	STD	40/40S	3.59	3.068	3.081
	3.500	0.300	XS	80/80S	3.59	2.900	2.934
	3.500	0.438	….	160	3.59	2.624	2.692
	3.500	0.600	XXS	….	3.59	2.300	2.409

*SEE SKETCHES 1 AND 2

DIMENSIONS OF WROUGHT STEEL PIPE AND WELD END CONFIGURATIONS

TABLE 10 (cont.)

PIPE DIMENSIONS			IDENTIFICATION		WELD END DIMENSIONS*		
INCH NOMINAL SIZE	OUTSIDE DIAMETER IN.	WALL THICKNESS IN.	SCHEDULE		VALVE OD A IN.	PIPE ID B IN.	C IN.
4	4.500	0.120	....	10/10S	4.62	4.260	
	4.500	0.237	STD	40/40S	4.62	4.026	4.044
	4.500	0.337	XS	80/80S	4.62	3.826	3.869
	4.500	0.438	....	120	4.62	3.624	3.692
	4.500	0.531	....	160	4.62	3.438	3.530
	4.500	0.674	XXS	....	4.62	3.152	3.279
6	6.625	0.134	....	10/10S	6.78	6.357	
	6.625	0.280	STD	40/40S	6.78	6.065	6.094
	6.625	0.432	XS	80/80S	6.78	5.761	5.828
	6.625	0.562	....	120	6.78	5.501	5.600
	6.625	0.719	....	160	6.78	5.187	5.326
	6.625	0.864	XXS	....	6.78	4.897	5.072
8	8.625	0.148	....	10/10S	8.78	8.329	
	8.625	0.250	....	20	8.78	8.125	8.146
	8.625	0.322	STD	40/40S	8.78	7.981	8.020
	8.625	0.406	....	60	8.78	7.813	7.873
	8.625	0.500	XS	80/80S	8.78	7.625	7.709
	8.625	0.594	....	100	8.78	7.437	7.544
	8.625	0.719	....	120	8.78	7.187	7.326
	8.625	0.812	....	140	8.78	7.001	7.163
	8.625	0.875	XXS	....	8.78	6.875	7.053
	8.625	0.906	....	160	8.78	6.813	6.998
10	10.750	0.165	....	10/10S	10.94	10.420	
	10.750	0.250	....	20/20S	10.94	10.250	10.272
	10.750	0.365	STD	40/40S	10.94	10.020	10.070
	10.750	0.500	XS	60/80S	10.94	9.750	9.834
	10.750	0.594	....	80	10.94	9.562	9.670
	10.750	0.719	....	100	10.94	9.312	9.451
	10.750	0.844	....	120	10.94	9.062	9.232
	10.750	1.000	XXS	140	10.94	8.750	8.959
	10.750	1.125	....	160	10.94	8.500	8.740
12	12.750	0.180	....	10/10S	12.97	12.390	
	12.750	0.250	....	20	12.97	12.250	12.272
	12.750	0.375	STD	40S	12.97	12.000	12.053
	12.750	0.406	....	40	12.97	11.938	11.999
	12.750	0.500	XS	80S	12.97	11.750	11.834
	12.750	0.562	....	60	12.97	11.626	11.725
	12.750	0.688	....	80	12.97	11.374	11.505
	12.750	0.844	....	100	12.97	11.062	11.232
	12.750	1.000	XXS	120	12.97	10.750	10.959
	12.750	1.125	....	140	12.97	10.500	10.740
	12.750	1.312	....	160	12.97	10.126	10.413

*SEE SKETCHES 1 AND 2

DIMENSIONS OF WROUGHT STEEL PIPE AND WELD END CONFIGURATIONS

TABLE 10 (cont.)

PIPE DIMENSIONS			IDENTIFICATION		WELD END DIMENSIONS*		
INCH NOMINAL SIZE	OUTSIDE DIAMETER IN.	WALL THICKNESS IN.	SCHEDULE		VALVE OD A IN.	PIPE ID B IN.	C IN.
14	14	0.188	....	10S	14.25	13.624	
	14	0.250	....	10	14.25	13.500	
	14	0.312	....	20	14.25	13.376	13.413
	14	0.375	STD	30	14.25	13.250	13.303
	14	0.438	....	40	14.25	13.124	13.192
	14	0.500	XS	....	14.25	13.000	13.084
	14	0.594	....	60	14.25	12.812	12.920
	14	0.750	....	80	14.25	12.500	12.646
	14	0.938	....	100	14.25	12.124	12.318
	14	1.094	....	120	14.25	11.812	12.044
	14	1.250	....	140	14.25	11.500	11.771
	14	1.406	....	160	14.25	11.188	11.498
16	16	0.188	....	10S	16.25	15.624	
	16	0.250	....	10	16.25	15.500	
	16	0.312	....	20	16.25	15.376	15.413
	16	0.375	STD	30	16.25	15.250	15.303
	16	0.500	XS	40	16.25	15.000	15.084
	16	0.656	....	60	16.25	14.688	14.811
	16	0.844	....	80	16.25	14.312	14.482
	16	1.031	....	100	16.25	13.938	14.155
	16	1.219	....	120	16.25	13.562	13.826
	16	1.438	....	140	16.25	13.124	13.442
	16	1.594	....	160	16.25	12.812	13.170
18	18	0.188	....	10S	18.28	17.624	
	18	0.250	....	10	18.28	17.500	
	18	0.312	....	20	18.28	17.376	17.413
	18	0.375	STD	....	18.28	17.250	17.303
	18	0.500	XS	....	18.28	17.000	17.084
	18	0.562	....	40	18.28	16.876	16.975
	18	0.750	....	60	18.28	16.500	16.646
	18	0.938	....	80	18.28	16.124	16.318
	18	1.156	....	100	18.28	16.688	15.936
	18	1.375	....	120	18.28	15.250	15.553
	18	1.562	....	140	18.28	14.876	15.225
	18	1.781	....	160	18.28	14.438	14.842
20	20	0.218	....	10S	20.31	19.564	
	20	0.250	....	10	20.31	19.500	
	20	0.375	STD	20	20.31	19.250	19.303
	20	0.500	XS	30	20.31	19.000	19.084
	20	0.594	....	40	20.31	18.812	18.920

*SEE SKETCHES 1 AND 2

DIMENSIONS OF WROUGHT STEEL PIPE AND WELD END CONFIGURATIONS

TABLE 10 (cont.)

PIPE DIMENSIONS			IDENTIFICATION		WELD END DIMENSIONS*		
INCH NOMINAL SIZE	OUTSIDE DIAMETER IN.	WALL THICKNESS IN.	SCHEDULE		VALVE OD A IN.	PIPE ID B IN.	C IN.
	20	0.812	….	60	20.31	18.376	18.538
	20	1.031	….	80	20.31	17.938	18.155
	20	1.281	….	100	20.31	17.438	17.717
	20	1.500	….	120	20.31	17.000	17.334
	20	1.750	….	140	20.31	16.500	16.896
	20	1.969	….	160	20.31	16.062	16.513
24	24	0.250	….	10/10S	24.38	23.500	
	24	0.375	STD	20	24.38	23.250	23.303
	24	0.500	XS	….	24.38	23.000	23.084
	24	0.562	….	30	24.38	22.876	22.975
	24	0.688	….	40	24.38	22.624	22.755
	24	0.969	….	60	24.38	22.062	22.263
	24	1.219	….	80	24.38	21.562	21.826
	24	1.531	….	100	24.38	20.938	21.280
	24	1.812	….	120	24.38	20.376	20.788
	24	2.062	….	140	24.38	19.876	20.350
	24	2.344	….	160	24.38	19.312	19.857
30	30	0.312	….	10/10S	30.38	29.376	29.413
	30	0.375	STD	….	30.38	29.250	29.303
	30	0.500	XS	20	30.38	29.000	29.084
	30	0.625	….	30	30.38	28.750	28.865
36	36	0.312	….	10	36.50	35.376	35.413
	36	0.375	STD	….	36.50	35.250	35.303
	36	0.500	XS	20	36.50	35.000	35.084
	36	0.625	….	30	36.50	34.750	34.865
	36	0.750	….	40	36.50	34.500	34.646
42	42	0.375	STD	….	42.50	41.250	41.303
	42	0.500	XS	….	42.50	41.000	41.084

*SEE SKETCHES 1 AND 2

SKETCH 1 TYPICAL WELD BEVEL DETAILS FOR WALL THICKNESS NOT OVER 0.88 in. (22 mm)

REFER TO ASME 16.25 FIG 2.

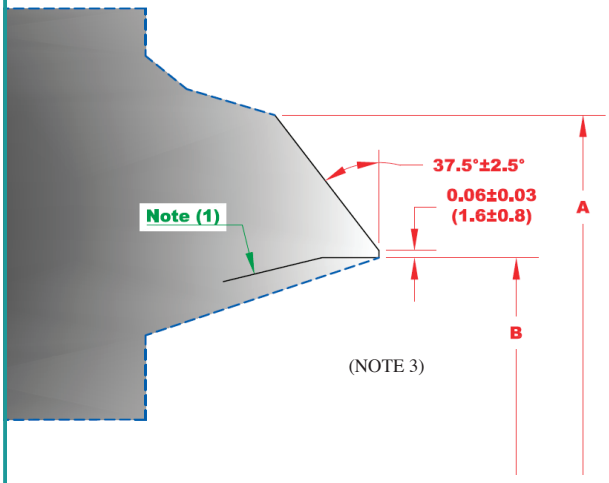

(a) Welding End Detail for Joint without Backing Ring

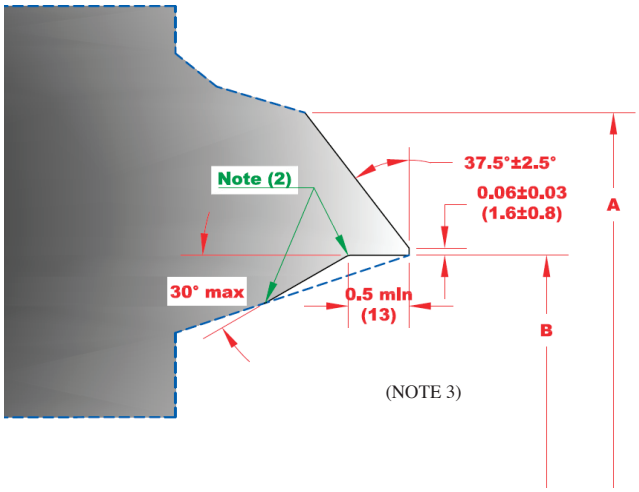

(b) Welding End Detail for Joint Using Split Rectangular Backing Ring

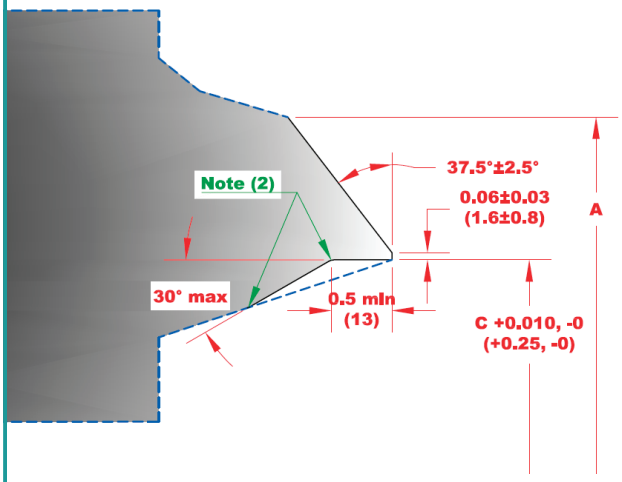

(c) Welding End Detail for Joint Using Continuous Rectangular Backing Ring

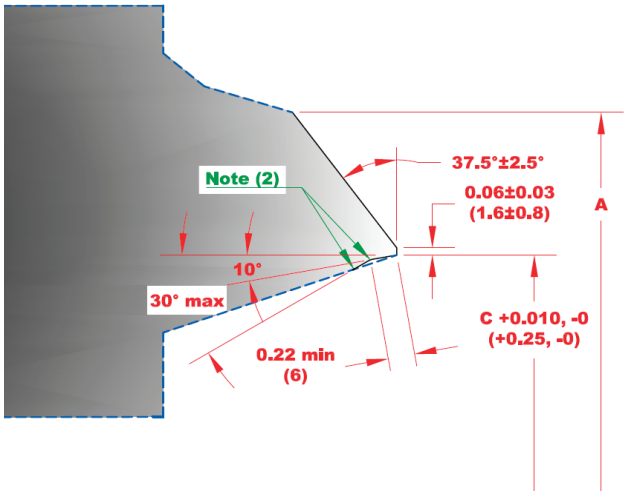

(d) Welding End Detail for Joint Using Continuous Tapered Backing Ring

GENERAL NOTES:

(a) Broken lines denote maximum envelope for transition from welding bevel and root face into body of component. Refer to Figure 1 of ASME B16.25 for details.

(b) Purchase order must specify contour of any backing ring to be used.

(c) Linear dimensions are in inches with millimeter values in parentheses.

NOTES:

(1) Internal surface may be as-formed or machined for dimension B at root face.

(2) Intersections should be slightly rounded.

(3) Tolerances for “B” dimension on valve weld ends:

- • ±0.03” (±1.0 mm) for NPS ≤ 10
- • ±0.06” (±2.0 mm) for 12 ≤ NPS ≤ 18
- • +0.12”, -0.06” (+3.0 mm, -2.0 mm) for NPS ≥ 20

SKETCH 2 TYPICAL WELD BEVEL DETAILS FOR WALL THICKNESS OVER 22 mm (0.88 in.)

REFER TO ASME 16.25 FIG 3.

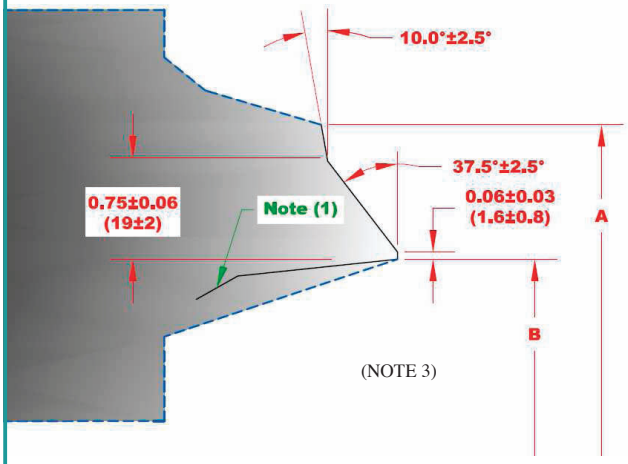

(a) Welding End Detail for Joint without Backing Ring

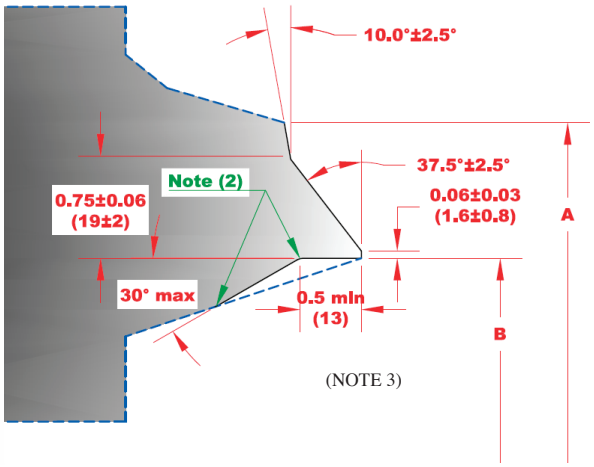

(b) Welding End Detail for Joint Using Split Rectangular Backing Ring

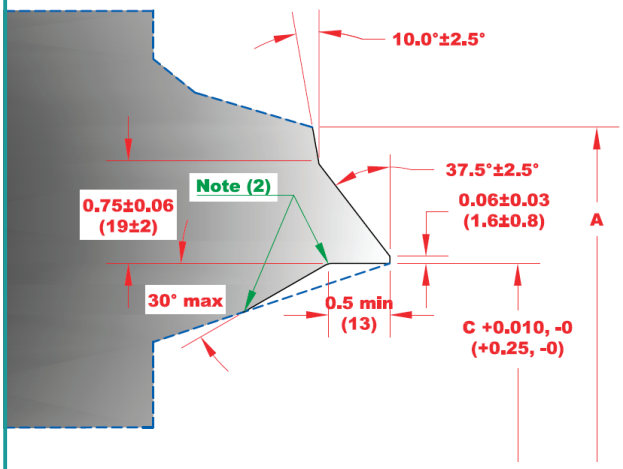

(c) Welding End Detail for Joint Using Continuous Rectangular Backing Ring

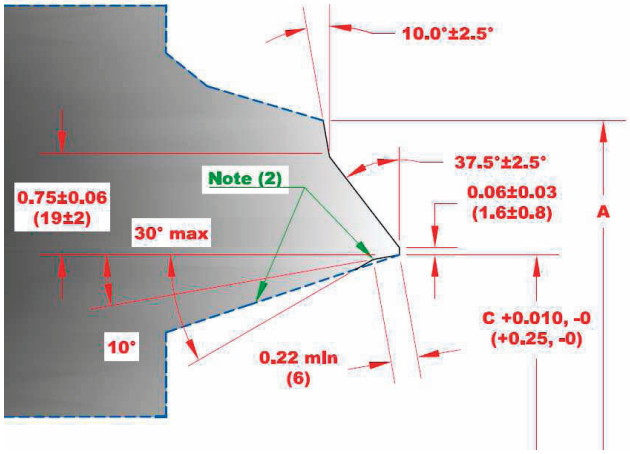

(d) Welding End Detail for Joint Using Continuous Tapered Backing Ring

GENERAL NOTES:

(a) Broken lines denote maximum envelope for transition from welding bevel and root face into body of component. Refer to Figure 1 of ASME B16.25 for details.

(b) Purchase order must specify contour of any backing ring to be used.

(c) Linear dimensions are in inches with millimeter values in parentheses.

NOTES:

(1) Internal surface may be as-formed or machined for dimension B at root face.

(2) Intersections should be slightly rounded.

(3) Tolerances for “B” dimension on valve weld ends:

- • ±0.03” (±1.0 mm) for NPS ≤ 10
- • ±0.06” (±2.0 mm) for 12 ≤ NPS ≤ 18
- • +0.12”, -0.06” (+3.0 mm, -2.0 mm) for NPS ≥ 20

STEEL VALVE FLANGE DIMENSIONS

For valve sizes through 24", Powell's standard for flange dimensions is ASME B16.5. Classes 150 and 300 valves use flanged fittings dimensions. Classes 600 and higher use flange dimensions.

For Reference Purposes the following Tables contain Flange Dimensions as described below:

TABLE 11: ASME B16.5 CLASSES 150 and 300, Sizes ½" through 24"

TABLE 12: ASME B16.5 CLASSES 600, Sizes ½" through 24"

STEEL VALVE FLANGE FITTING DIMENSIONS

All Dimensions in Units of Inches

TABLE 11

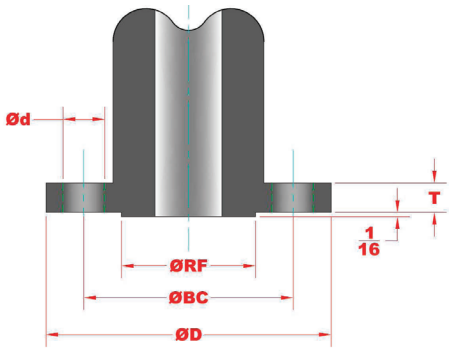

CLASS 150

Nominal Pipe Size	Outside Diameter of Flange (D)	Diameter of Bolt Circle (BC)	Diameter of Bolt Holes (d)	Number of Bolts	Thickness (T)	Raised Face Diameter (RF)
½	3.50	2.38	0.62	4	0.31	1.38
¾	3.88	2.75	0.62	4	0.34	1.69
1	4.25	3.12	0.62	4	0.38	2.00
1 ¼	4.62	3.50	0.62	4	0.44	2.50
1 ½	5.00	3.88	0.62	4	0.50	2.88
2	6.00	4.75	0.75	4	0.56	3.62
2 ½	7.00	5.50	0.75	4	0.62	4.12
3	7.50	6.00	0.75	4	0.69	5.00
3 ½	8.50	7.00	0.75	8	0.75	5.50
4	9.00	7.50	0.75	8	0.88	6.19
5	10.00	8.50	0.88	8	0.88	7.31
6	11.00	9.50	0.88	8	0.94	8.50
8	13.50	11.75	0.88	8	1.06	10.62
10	16.00	14.25	1.00	12	1.12	12.75
12	19.00	17.00	1.00	12	1.19	15.00
14	21.00	18.75	1.12	12	1.31	16.25
16	23.50	21.25	1.12	16	1.38	18.50
18	25.00	22.75	1.25	16	1.50	21.00
20	27.50	25.00	1.25	20	1.62	23.00
24	32.00	29.50	1.38	20	1.81	27.25

CLASS 300

Nominal Pipe Size	Outside Diameter of Flange (D)	Diameter of Bolt Circle (BC)	Diameter of Bolt Holes (d)	Number of Bolts	Thickness (T)	Raised Face Diameter (RF)
½	3.75	2.62	0.62	4	0.50	1.38
¾	4.62	3.25	0.75	4	0.56	1.69
1	4.88	3.50	0.75	4	0.62	2.00
1 ¼	5.25	3.88	0.75	4	0.69	2.50
1 ½	6.12	4.50	0.88	4	0.75	2.88
2	6.50	5.00	0.75	8	0.81	3.62
2 ½	7.50	5.88	0.88	8	0.94	4.12
3	8.25	6.62	0.88	8	1.06	5.00
3 ½	9.00	7.25	0.88	8	1.12	5.50
4	10.00	7.88	0.88	8	1.19	6.19
5	11.00	9.25	0.88	8	1.31	7.13
6	12.50	10.62	0.88	12	1.38	8.50
8	15.00	13.00	1.00	12	1.56	10.62
10	17.50	15.25	1.12	16	1.81	12.75
12	20.50	17.75	1.25	16	1.94	15.00
14	23.00	20.25	1.25	20	2.06	16.25
16	25.50	22.50	1.38	20	2.19	18.50
18	28.00	24.75	1.38	24	2.31	21.00
20	30.50	27.00	1.38	24	2.44	23.00
24	36.00	32.00	1.62	24	2.69	27.25

STEEL VALVE FLANGE DIMENSIONS

All Dimensions in Units of Inches

TABLE 12

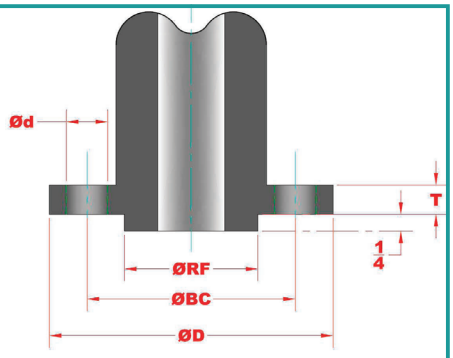

CLASS 600

Nominal Pipe Size	Outside Diameter of Flange (D)	Diameter of Bolt Circle (BC)	Diameter of Bolt Holes (d)	Number of Bolts	Thickness (T)	Raised Face Diameter (RF)
½	3.75	2.62	0.62	4	0.56	1.38
¾	4.62	3.25	0.75	4	0.62	1.69
1	4.88	3.50	0.75	4	0.69	2.00
1 ¼	5.25	3.88	0.75	4	0.81	2.50
1 ½	6.12	4.50	0.88	4	0.88	2.88
2	6.50	5.00	0.75	8	1.00	3.62
2 ½	7.50	5.88	0.88	8	1.12	4.12
3	8.25	6.62	0.88	8	1.25	5.00
3 ½	9.00	7.25	1.00	8	1.38	5.50
4	10.75	8.50	1.00	8	1.50	6.19
5	13.00	10.50	1.12	8	1.75	7.31
6	14.00	11.50	1.12	12	1.88	8.50
8	16.50	13.75	1.25	12	2.19	10.62
10	20.00	17.00	1.38	16	2.50	12.75
12	22.00	19.25	1.38	20	2.62	15.00
14	23.75	20.75	1.50	20	2.75	16.25
16	27.00	23.75	1.62	20	3.00	18.50
18	29.25	25.75	1.75	20	3.25	21.00
20	32.00	28.50	1.75	24	3.50	23.00
24	37.00	33.00	2.00	24	4.00	27.25

METHOD OF DESIGNATING LOCATION OF AUXILIARY CONNECTIONS WHEN SPECIFIED

FIGURE 1

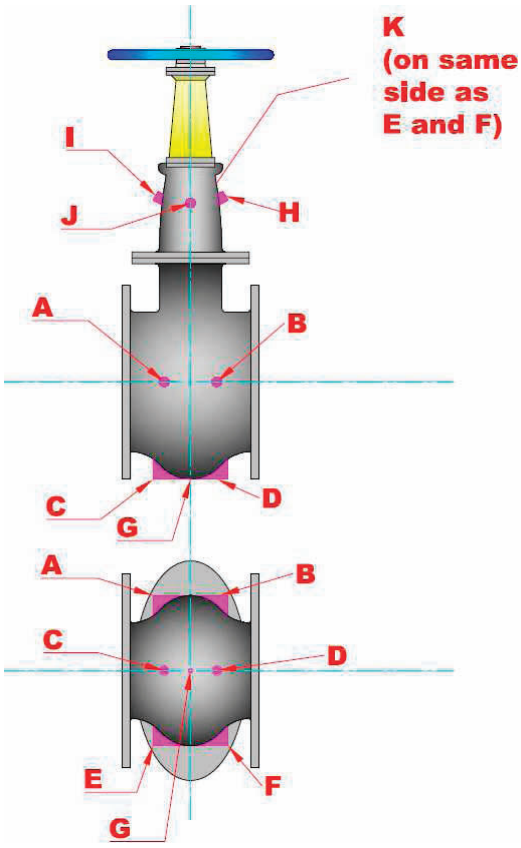

GATE VALVE

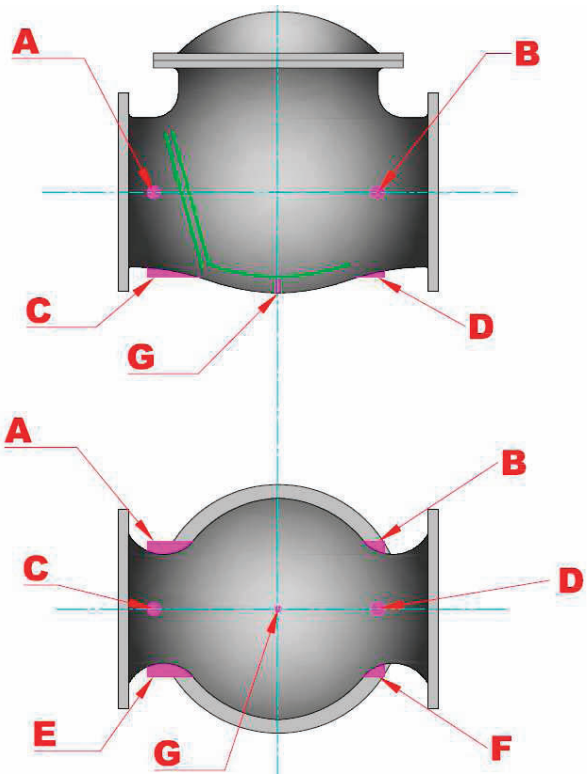

CHECK VALVE

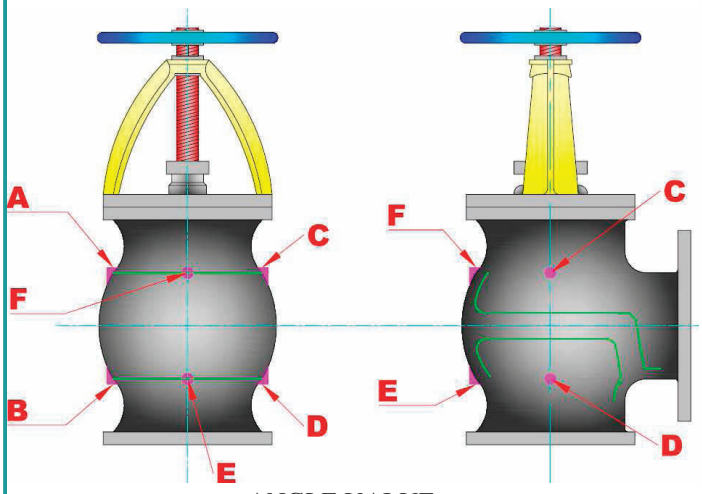

ANGLE VALVE

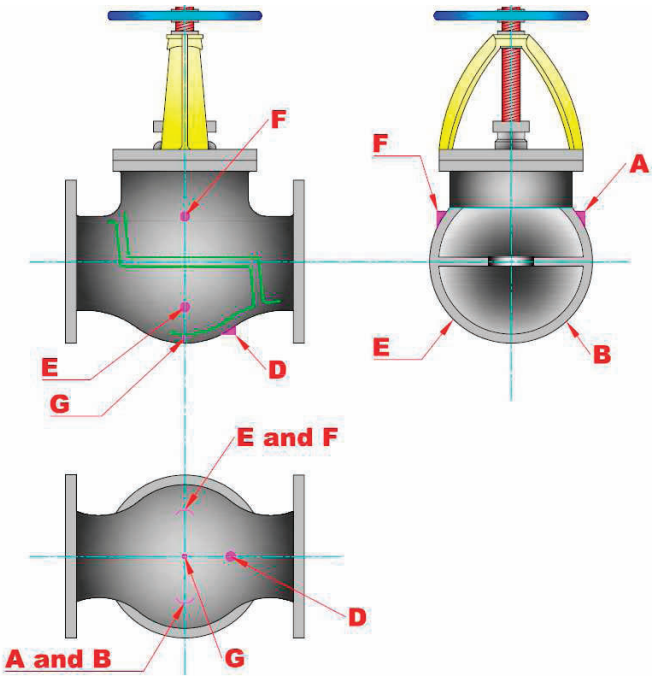

GLOBE VALVE

GENERAL NOTE:
The above sketches represent valves with symmetrical shapes. Sketches are illustrative only and do not imply design.

FLOW DESIGN AND MAINTANENCE RECOMMENDATIONS

(1) SWING CHECK VALVES- Minimum ½ psi differential pressure across valve to maintain proper "full open" position.

(2) LIFT CHECK AND NON-RETURN VALVES - Minimum 2 psi differential pressure across valve to maintain proper "full open" position

(3) Recommended length of straight pipe before and after check and non-return valves to be 10 times pipe diameter to avoid flow turbulence at valve.

(4) For metal seated check valves at low pressure applications (approximately 50 psi or less), seat leakage may be significantly greater than normal high pressure seat test allowable limit.

(5) RECOMMENDED MAXIMUM FLOW VELOCITIES (APPROXIMATE):

VALVE SIZE	WATER (FT/MIN)	SATURATED STEAM (FT/MIN)	SUPERHEATED STEAM (FT/MIN)
3" and UNDER	1200	7200	9000
4	1200	8800	11000
6	1620	10400	13000
8	1860	12000	15000
10	2100	14400	18000
12	2220	15200	19000
14	2400	16000	20000
16	2400	17600	22000
18	2400	19200	24000
20" and LARGER	2400	20800	26000

(6) GATE VALVES — Not to be used in throttling services. Open and closed service only.

(7) GLOBE VALVES— Not to be throttled under 20% open.

FOR MAINTENANCE AND SAFETY INFORMATION, SEE THE POWELL *HANDBOOK OF VALVE INFORMATION*, AS DESCRIBED ON PAGE 31.

COMPARISON CHART OF VALVE SIZE/NOMINAL PIPE SIZE

TABLE 13

METRIC NOMINAL SIZE (DN)	ENGLISH NOMINAL SIZE (NPS)
8	1/4
10	3/8
15	1/2
20	3/4
25	1
32	1-1/4
40	1-1/2
50	2
65	2-1/2
80	3
100	4
150	6
200	8
250	10
300	12
350	14
400	16
450	18
500	20
600	24

CONVERSION FACTORS

	TO CONVERT FROM	TO	MULTIPLY BY
LENGTH	INCHES (IN)	MILLIMETERS (MM)	25.4
	INCHES (IN)	CENTIMETERS (CM)	2.54
	FEET (FT)	INCHES (IN)	12
WEIGHT	POUNDS (LB)	KILOGRAMS (KG)	0.4536
	POUNDS (LB)	NEWTONS (N)	4.448
PRESSURE*	PSI	KILOGRAMS/M^2	703
	PSI	KILOGRAMS/CM^2	0.0703
	PSI	KILOGRAMS/MM^2	0.000703
	PSI	BAR	0.0689
	PSI	ATMOSPHERE	0.068
	PSI	KILOPASCAL	6.895
	PSI	MEGAPASCAL	0.006895
	PSI	NEWTON/MM^2	0.006895
	PSI	IN. WATER**	27.68
	PSI	FT. WATER**	2.307
	PSI	IN. MERCURY**	2.036
	PSI	PSF	144
AREA	SQ.INCH (IN^2)	SQ.CENTIMETERS (CM^2)	6.452

TEMPERATURE

TO CONVERT FROM DEGREES CENTIGRADE (C) TO DEGREES FAHRENHEIT (F): F=1.8*C+32

TO CONVERT FROM DEGREES FAHRENHEIT (F) TO DEGREES CENTIGRADE (C): C=0.556* (F-32)

NOTE: MOST FACTORS ARE ROUNDED OFF AND NOT EXACT CONVERSIONS.

*- PSI = POUNDS PER SQUARE INCH AND PSF = POUNDS PER SQUARE FOOT.

**- WATER AT 60F. MERCURY AT 32F.

MEASUREMENT EQUIVALENTS

TABLE 14

FRACTION				DECIMAL	MILLIMETERS
			1/64	0.0156	0.3969
		1/32		0.0313	0.7938
				0.0394	1.0000
			3/64	0.0469	1.1906
	1/16			0.0625	1.5875
			5/64	0.0781	1.9844
				0.0787	2.0000
		3/32		0.0938	2.3813
			7/64	0.1094	2.7781
				0.1181	3.0000
1/8				0.1250	3.1750
			9/64	0.1406	3.5719
		5/32		0.1563	3.9688
				0.1575	4.0000
			11/64	0.1719	4.3656
	3/16			0.1875	4.7625
				0.1969	5.0000
			13/64	0.2031	5.1594
		7/32		0.2188	5.5563
			15/64	0.2344	5.9531
				0.2362	6.0000
1/4				0.2500	6.3500
			17/64	0.2656	6.7469
				0.2756	7.0000
		9/32		0.2813	7.1438
			19/64	0.2969	7.5406
	5/16			0.3125	7.9375
				0.3150	8.0000
			21/64	0.3281	8.3344
		11/32		0.3438	8.7313
				0.3543	9.0000
			23/64	0.3594	9.1281
3/8				0.3750	9.5250
			25/64	0.3906	9.9219
				0.3937	10.0000
		13/32		0.4063	10.3188
			27/64	0.4219	10.7156
				0.4331	11.0000
	7/16			0.4375	11.1125
			29/64	0.4531	11.5094
		15/32		0.4688	11.9063
				0.4724	12.0000
			31/64	0.4844	12.3031
1/2				0.5000	12.7000

FRACTION				DECIMAL	MILLIMETERS
				0.5118	13.0000
			33/64	0.5156	13.0969
		17/32		0.5313	13.4938
			35/64	0.5469	13.8906
				0.5512	14.0000
	9/16			0.5625	14.2875
			37/64	0.5781	13.6844
				0.5906	15.0000
		19/32		0.5938	15.0813
			39/64	0.6094	15.4781
5/8				0.6250	15.8750
				0.6299	16.0000
			41/64	0.6406	16.2719
		21/32		0.6563	16.6688
				0.6693	17.0000
			43/64	0.6719	17.0656
	11/16			0.6875	17.4625
			45/64	0.7031	17.8594
				0.7087	18.0000
		23/32		0.7188	18.2563
			47/64	0.7344	18.6531
				0.7480	19.0000
3/4				0.7500	19.0500
			49/64	0.7656	19.4469
		25/32		0.7813	19.8438
				0.7874	20.0000
			51/64	0.7969	20.2406
	13/16			0.8125	20.6375
				0.8268	21.0000
			53/64	0.8281	21.0344
		27/32		0.8438	21.4313
			55/64	0.8594	21.8281
				0.8661	22.0000
7/8				0.8750	22.2250
			57/64	0.8906	22.6219
				0.9055	23.0000
		29/32		0.9063	23.0188
			59/64	0.9219	23.4156
	15/16			0.9375	23.8125
				0.9449	24.0000
			61/64	0.9531	24.2094
		31/32		0.9688	24.6063
				0.9843	25.0000
			63/64	0.9844	25.0031
1				1.0000	25.4000

March, 2011 THE WILLIAM POWELL COMPANY

GENERAL TERMS AND CONDITIONS OF SALE

1. TERMS EXCLUSIVE: The terms and conditions of the purchase order or requisition to which these GENERAL TERMS AND CONDITIONS OF SALE (these "Terms and Conditions") relate or are attached (each, an "Order"), are exclusive and represent the full and final agreement of The William Powell Company, an Ohio corporation ("Powell") and the purchaser ("Purchaser") as they relate to the goods, materials, services or labor covered in the Order (all, whether or not tangible property or goods, the "Products"), and may not be added to, modified, superseded or altered except by written agreement or modification signed by Powell's authorized representative, notwithstanding any additional or other proposals, terms and conditions which may now or in the future appear on Purchaser's Orders or other forms (notification of objection thereto being given hereby), in whatever form transmitted, and notwithstanding any shipment of Products, acceptance of payments or other similar acts of Powell.

2. SALE BY AGENT OR REPRESENTATIVE: These Terms and Conditions shall govern the liability and obligations of Powell in regard to the transaction in Products, whether the sale was procured directly by Powell or indirectly through an authorized sales representative.

3. CONTRACT: Orders may be submitted to Powell in writing (which will include via an electronic transmission) or orally, provided, however, that if Purchaser fails to provide a detailed, formal written Order (a) within ten (10) days of an oral Order or (b) before shipment of the Order, whichever is earlier, then Product descriptions, quantities, specifications, etc., as set forth in Powell's acknowledgement, acceptance and/or invoice, shall be conclusive and binding on both parties, and discrepancies shall be for Purchaser's account. All Orders are subject to credit approval and acceptance by Powell. An Order shall be deemed to have been accepted by Powell upon the first to occur of the following: (i) Powell's first shipment or other tender of the Order or (ii) acceptance thereof by Powell in writing.

4. PERMISSIBLE VARIATIONS: Powell has the right, prior to the delivery of Products to Purchaser and without the giving of notice to Purchaser, to make any changes in the composition, fabrication or design of the Products which, in the opinion of Powell, do not affect the general characteristics or properties of the Products. In addition, Powell may make any change or any variation in the Products, whether of quality or quantity, which is within governmental or professional standards or specifications applicable at the time of manufacture without giving notice to Purchaser. Purchaser will accept any Products which may incorporate any changes in the composition, fabrication or design.

5. PRICES: Prices for Products are quoted and payable in U.S. dollars ("USD"). Prices stated in general price lists are subject to change without prior notice, at Powell's sole discretion. Prices that are provided in a specific quotation will remain firm for thirty (30) days of the issued date of the written quotation. All prices are exclusive of freight costs, taxes and duties. All taxes (including, without limitation, sales, use, stamp, value added and other taxes) duties, fees, charges and assessments by whomsoever levied on or with respect to the Products, and whether levied against Purchaser or Powell, are for Purchaser's account and, unless invoiced, shall be paid by Purchaser directly to the appropriate governmental agency.

6. SHIPPING TERMS: Delivery of Products to Canada, the United States and Mexico shall be F.O.B. (as defined in the Uniform Commercial Code as in effect in the State of Ohio) Powell's plant of manufacture. Delivery of Products outside of Canada, United States and Mexico shall be Ex Works (as defined by INCOTERMS 2000) Powell's plant of manufacture. All transportation expenses, freight and insurance shall be paid by Purchaser, and risk of delay, loss or damage incurred in transit shall be borne by Purchaser, who shall be responsible to file any such claims with the relevant carrier(s) or insurers.

Upon tender of delivery, title shall pass to Purchaser, subject to Powell's right of stoppage in transit and to Powell's security interest in the Products, as set forth in Section 8.

If the Products are held by Powell subject to receiving instructions from Purchaser or in any case where Powell, in its sole discretion, determines any part of the Products should be held for Purchaser's account, Powell may invoice the Products, and Purchaser agrees to make payment in accordance with these Terms and Conditions. Products invoiced and held at any location by Powell will be held at Purchaser's risk, and Powell may charge for (but is not obligated to carry) insurance and storage.

If Purchaser has declared or manifested an intention not to accept delivery in accordance with these Terms and Conditions, no tender will be necessary, but Powell may, at its option, give notice to Purchaser that Powell is ready and willing to deliver and such notice will constitute a valid tender of delivery.

7. INSPECTION AND ACCEPTANCE: Each shipment shall be inspected by Purchaser for observable damage and/or non-conformity at the time of delivery of the Products. Failure to so inspect shall constitute a waiver of Purchaser's rights of inspection and shall constitute an unqualified acceptance of the Products. If, after such inspection, Purchaser attempts to reject any Products, Purchaser shall fully specify all claimed damage or non-conformity in writing in a notice of rejection sent to Powell within five (5) days of delivery of the Products. Purchaser's failure to so specify shall constitute a waiver of that damage or non-conformity. Partial deliveries shall be accepted by Purchaser and paid for according to these Terms and Conditions.

8. PAYMENT TERMS: Payment shall be due net thirty (30) days from the date of invoice. Overdue accounts shall be subject to a carrying charge of one and one-half percent (1.5%) per month or portion of a month on the unpaid balance until paid in full. In the event Purchaser shall default on its obligations hereunder, Purchaser shall be liable for all of Powell's costs and expenses of collection, including reasonable attorneys' fees. Powell may, at its option, cancel and/or sell any unshipped Products should Purchaser fail to fulfill the complete terms of payment. Purchaser will have no right to offset any amounts against any payment or other obligation which Powell may owe to Purchaser. Powell hereby reserves a security interest in the Products to secure Purchaser's payment of the purchase price and any other amounts owed by Purchaser, and Purchaser agrees that Powell may (but is not obligated to) take such action as Powell deems advisable to evidence and perfect such interest and that Purchaser will cooperate with Powell in the taking of such actions.

9. CREDIT APPROVAL: Notwithstanding the provisions of Section 8, Powell may at any time decline to make any shipment or delivery or perform any work except upon receipt of payment or upon terms and conditions or security satisfactory to Powell, including, but not limited to, requiring that Purchaser provide Powell one or more letters of credit.

10. LEAD TIMES: Estimated lead times, if specified, are approximate only and are not guaranteed. Failure to ship on or near the estimated date shall not entitle Purchaser to any remedy or to cancel the Order without charge. Estimated lead times are provided Ex Works Powell's plant in weeks after receipt of Order. Estimated lead times are stated on a net basis and do not include any additional lead time due to scheduled and/or unscheduled plant shutdowns. Scheduled plant shutdowns include a two (2) week shutdown each winter and each summer. Estimated lead times are quoted on the basis of material availability and plant loading at the time of quotation, which are subject to change. Purchaser should confirm any estimated lead times at time of Order.

11. MINIMUM ORDER CHARGE: With respect to any Order that includes spare, replacement or component parts ("Parts") as Products, a minimum Order charge of One Hundred USD ($100) shall apply. With respect to any Order that includes valves ("Valves") as Products, a minimum Order charge of Three Hundred Fifty USD ($350) shall apply.

12. RETURN OF PRODUCTS: No Products shall be returned to Powell without Powell's prior written agreement. Products returned by Purchaser shall be returned in the same condition as when delivery was affected by Powell. Only Products that are new, unused and in a condition suitable for immediate resale shall be considered for return. Powell reserves the right to assess a minimum thirty-five percent (35%) restocking charge for Products returned for reasons other than defects or non-conformity.

13. CANCELLATION/SUSPENSION: Purchaser shall not cancel or suspend an Order without Powell's prior written consent, which such consent Powell shall be under no obligation to provide. In the event of cancellation or suspension of an Order without Powell's prior written consent, in addition to Powell's other rights and remedies available hereunder and under applicable law, Purchaser shall pay cancellation charges as follows: (a) Order entered in Powell's system, but no engineering yet initiated, 5%, (b) Engineering work has begun and orders for casings and/or outside purchased parts have been placed, 25%, (c) Castings poured and/or components made, but not yet received at Powell's location, 75%, (d) Castings poured and/or components made and received at Powell's location, 85%, (e) Manufacturing process started, 95% and (f) Components finished, 100%.

Powell may cancel all or part of an Order immediately upon the happening of any of the following: Purchaser is delinquent on any of its obligations hereunder or under any order or transaction with Powell, insolvency of Purchaser; the appointment of a custodian as that term is defined in Title 11 U.S.C., as amended (the "Bankruptcy Code"), or the commencement of a case under any chapter of the Bankruptcy Code or the bankruptcy, receivership, insolvency or similar laws of any country for, by or against Purchaser; Purchaser's suspension or termination of business or assignment for the benefit of creditors; or any event, whether or not similar to the foregoing, which materially impairs Purchaser's ability to perform hereunder. Powell's rights to cancel or postpone set forth herein may be exercised by Powell without liability.

14. CORRECTIONS: Powell reserves the right to make corrections to price lists, quotations, invoices or other contract documents in the event of clerical or typographical errors.

15. COUNTRY OF ORIGIN: Powell reserves the right to furnish Products from any of its plants at its sole discretion and does not represent that the Products listed

herein originate from any specific country. Any costs affected by country of origin, including, but not limited to, customs duties, are not included in the purchase price and are for Purchaser's account.

16. INFORMATION REGARDING PRODUCTS: Purchaser acknowledges that it has received and is familiar with Powell's and any other manufacturer's labeling and literature concerning the Products and will forward such information to its employees, agents and customers.

17. POWELL PRODUCT WARRANTY: For a period of (a) ninety (90) days from tender of delivery with respect to Parts and (b) the earlier of (i) eighteen (18) months from tender of delivery or (ii) twelve (12) months from installation with respect to Valves, Powell warrants to Purchaser that the Parts and/or Valves, as applicable, of its own manufacture are free of defects in material and workmanship, under normal use and proper operation. If any such Products fail to comply with such warranty, Powell, at Powell's option, shall either: (i) replace such defective Products; (ii) furnish replacement parts for repairing Products (iii) issue written authorization for Purchaser or others to replace or repair, without charge to Purchaser, at costs comparable to Powell's normal manufacturing costs, those parts proven defective; or (iv) refund all monies paid by Purchaser to Powell for such Products and, at the sole discretion of Powell, have the Products returned to Powell at Powell's expense. Finished materials and accessories purchased from other manufacturers are warranted only to the extent of the manufacturer's warranty to Powell (to the extent transferable by Powell to Purchaser). Any alteration in material or design of the Products or component parts thereof by Purchaser or others and/or the undertaking of repairs or replacement by Purchaser or its agents without Powell's written consent shall relieve Powell of all responsibility herewith.

Powell's obligations under this warranty shall be conditioned upon (a) Purchaser's notifying Powell of any alleged defect(s) in a writing that references Purchaser's Order number and provides complete identification of any allegedly defective Products within ten (10) days of the discovery of the damage or defect, and (b) Powell's satisfying itself upon inspection that its warranty has been breached. Purchaser may not bring any action under or arising from an Order or these Terms and Conditions unless such action is commenced within one year after the cause of action accrues.

EXCEPT AS SET FORTH IN THIS SECTION 17, POWELL MAKES NO WARRANTY CONCERNING THE PRODUCTS WHATSOEVER; POWELL DISCLAIMS AND EXCLUDES ALL OTHER WARRANTIES, EXPRESS OR IMPLIED, INCLUDING, WITHOUT LIMITATION, WARRANTIES OF NON-INFRINGEMENT AND THE IMPLIED WARRANTIES OF MERCHANTABILITY AND FITNESS FOR A PARTICULAR PURPOSE. THE OBLIGATIONS SET FORTH IN THIS SECTION 17 ARE POWELL'S SOLE OBLIGATIONS AND PURCHASER'S EXCLUSIVE REMEDY. POWELL SHALL NOT BE LIABLE FOR ANY DIRECT, INDIRECT, INCIDENTAL OR CONSEQUENTIAL DAMAGES, AND PURCHASER HEREBY WAIVES, FOR ITSELF AND ITS SUCCESSORS AND ASSIGNS, (A) ANY AND ALL CLAIMS FOR PUNITIVE DAMAGES AND (B) ALL CLAIMS OF NEGLIGENCE OR STRICT LIABILITY OR BOTH. WITHOUT LIMITATION TO THE FOREGOING, IN NO EVENT SHALL POWELL BE LIABLE FOR THE LOSS OF USE OF THE PRODUCT OR FOR THE LOSS OF USE OF ANY OTHER PRODUCT, PROCESS, EQUIPMENT, OR FACILITIES OF PURCHASER OR OF THE END-USER, WHETHER PARTIALLY OR WHOLLY DUE TO DEFECTS IN MATERIAL AND/OR WORKMANSHIP AND/OR DESIGN OF POWELL'S PRODUCT, AND IN NO EVENT SHALL POWELL BE LIABLE FOR REMOVAL OF APPURTENANCES OR INCIDENTALS SUCH AS CONNECTIONS, PIPE WORK AND SIMILAR ITEMS OF OBSTRUCTION OR FOR ANY COSTS BROUGHT ABOUT BY NECESSITY OF REMOVING THE PRODUCT FROM ITS POINT OF INSTALLATION.

Purchaser (a) recognizes that the limitations contained in this Section 17 are material factors in Powell's sale of the Products at the price(s) specified, and (b) agrees that any accommodation to Purchaser by Powell, whether for sales policy reasons or otherwise, shall not be taken to establish any liability of Powell or any contract term inconsistent with this Agreement.

Purchaser shall neither make nor purport to make (a) any warranty to any person by or on behalf of Powell or (b) any warranty or representation inconsistent with this Section 17.

18. COMPLIANCE WITH LAWS: Powell certifies that the Products produced by it, if any, were produced in compliance with all applicable requirements of Sections 6, 7 and 12 of the Fair Labor Standards Act of 1938, as amended, and the Regulations and Orders of the Administrator of the Wage and Hour Division issued under Section 14 thereof.

Powell shall endeavor to comply with all applicable Ohio and United States federal laws. Powell is not responsible for compliance with any other laws or regulations, or with any Product standard or specification, whether of general or particular application, unless Purchaser has furnished specific written notice thereof prior to Powell's entry of Purchaser's Order.

All sales of Products are conditioned upon and subject to strict compliance with United States export control laws, rules and regulations, including, without limitation, the Export Administration Act, the Export Administration Regulations, the Arms Control Act, the International Traffic in Arms Regulations, the Trading With the Enemy Act, the International Economic Powers Act and the Foreign Assets Control Regulations, as they may be amended and supplemented from time to time (each, an "Export Law" and collectively, the "Export Laws"). For any sale of Products requiring a license, permit or other approval under any Export Law ("Restricted Products"), Powell shall determine the feasibility of obtaining such license, permit or other approval ("Export Approval") and whether it will fill the order for the Restricted Products in light of required Export Approval. In the event Powell applies for Export Approval for the Restricted Products, it shall do so at Purchaser's cost and expense and Purchaser agrees to reimburse Powell for any cost or expenses (including Powell's reasonable attorneys' fees) incurred by Powell in pursuing Export Approval. Powell shall not be under any obligation to ship any such Restricted Products unless and until such Export Approval is granted, and only in strict compliance with the terms and conditions of such Export Approval. Purchaser shall be responsible for timely obtaining and maintaining any required import license, permit or approval necessary to import any Restricted Products into Purchaser's country and any other required governmental authorization ("Import Approval"). Powell shall not be liable if any Export Approval or Import Approval is delayed, denied, revoked, restricted or not renewed, and Purchaser shall not be relieved thereby of its obligations to pay Powell for the Restricted Products or Powell's costs and expenses of obtaining Export Approval in respect of Restricted Products under the Export Laws.

For Products other than Restricted Products, Purchaser (or its designated export agent) shall be responsible for the timely application for any required export authorization and the payment of any required fees, duties, taxes, tariffs, levies or other charges necessary to export the Products out the United States of America and shall be responsible for timely obtaining and maintaining any required Import Approval and the payment of any required fees, duties, taxes, tariffs, levies or other charges necessary to import the Products into Purchaser's country. Powell shall not be liable if any export authorization or Import Approval is delayed, denied, revoked, restricted or not renewed, and Purchaser shall not be relieved thereby of its obligations to pay Powell for the Products.

Purchaser shall not make any disposition of any Products purchased hereunder, by way of transshipment, reexport, diversion or otherwise, other than in and to the ultimate end user and country of destination specified on Purchaser's order or declared as the ultimate end user and country of ultimate destination on Powell's invoices, except as the Export Laws or Export Approval may expressly permit. Purchaser shall not distribute or resell any Product to or within any country or to any individual, government authority or other entity that is presently or at any time in the future subject to sanctions of the United States government, or is in violation of any Export Laws or other United States federal laws, statutes, codes, Executive Orders, decrees, rules or regulations relating to terrorism, drug trafficking or money laundering, or is designated under any such authority as being subject to sanctions or connected in any way to terrorism, drug trafficking or money laundering, including, without limitation, on the Specially Designated Nationals List and Block Persons List maintained by the Office of Foreign Assets Control (OFAC), United States Department of the Treasury, and the Denied Persons List, the Entity List and the Unverified List maintained by the Bureau of Industry and Security, United States Department of Commerce.

Purchaser shall indemnify and hold harmless Powell from and against any damages, liabilities or expenses of any kind incurred by Powell as a result of Purchaser's direct or indirect breach of any term or condition related to the Export Laws.

19. SAFETY: Purchaser warrants that it will comply with all laws, regulations, standards and requirements which are applicable to the use of the Products and Purchaser's business.

20. CONFIDENTIALITY: Purchaser will not disclose or otherwise disseminate, directly or indirectly, any of the terms of these Terms and Conditions or any other information of Powell given to or received by Purchaser or its associates or agents, unless Purchaser received Powell's written permission or such information is required to be disclosed by law or becomes part of the public domain through no fault of Purchaser, its associates or agents.

21. GOVERNING LAW; JURISDICTION AND VENUE: These Terms and Conditions shall be governed by and construed in accordance with the internal laws of the State of Ohio, without regard to such state's choice of law principles. These Terms and Conditions shall not be governed by or construed in accordance with the United Nations Convention on the International Sale of Goods, 1980, for any purpose. Customer and Powell hereby submit to the jurisdiction and venue of the state and federal courts in Cincinnati, Hamilton County, Ohio over any controversy relating to or arising from these Terms and Conditions. Notwithstanding the foregoing, Powell's right to institute or defend any proceedings in any jurisdiction, in or out of the United State of America, shall not be limited.

22. SEVERABILITY: If any of the provisions of these Terms and Conditions are deemed invalid, illegal or unenforceable, the validity, legality and enforceability of the remaining provisions will in no way be affected or impaired thereby.

23. FORCE MAJEURE: Delivery of all or any part of the Products is contingent upon Powell's ability to obtain supplies, raw materials and services through its regular and usual sources of supply. If by reason of any contingency beyond Powell's reasonable control, including (but not limited to) war, governmental requests, restrictions or regulations, fire, flood, casualty, accident, or other acts of God, strikes or other difficulties with employees, delay or inability to obtain labor, equipment, material and services through Powell's usual sources, failure or refusal of any carrier to transport materials, delay in transport thereof, or any other similar occurrence, Powell is not able to meet anticipated deliveries, Powell shall not be liable therefore and may, in its discretion without prior notice to Purchaser, postpone the delivery date(s) under this document for a time which is reasonable under all the circumstances. If during the occurrence of any of the foregoing contingencies, Powell holds any of the Products, Powell may invoice and hold the same for the account of Purchaser and Purchaser agrees to make payment at the maturity of the invoice so rendered.

24. ASSIGNMENT: No right or interest in the contract arising from these Terms and Conditions shall be assigned by Purchaser and no delegation of any obligation owed by Purchaser shall be made without the prior written permission of Powell. As used herein, "Purchaser" and "Powell" include the respective heirs, executors, personal representatives, successors and permitted assigns of each.

25. REMEDIES CUMULATIVE; NO WAIVER: The individual rights and remedies of Powell reserved herein shall be cumulative and additional to any other or further remedies provided in law or equity or in this document. Waiver by Powell of performance or breach of any provision hereof by Purchaser, or failure of Powell to enforce any provision hereof which may establish a defense or limitation of liability, shall not be deemed a waiver of future compliance therewith or a course of performance modifying such provision, and such provision shall remain in full force and effect as written.

26. LIMITATION OF LIABILITY: UNDER NO CIRCUMSTANCES SHALL POWELL BE LIABLE TO PURCHASER UNDER OR IN CONNECTION WITH ORDERS FOR PRODUCTS AND THESE TERMS AND CONDITIONS, WHETHER ANY CLAIM FOR RECOVERY IS BASED UPON OR ARISES OUT OF THEORIES OF BREACH OF CONTRACT, BREACH OF WARRANTY, INDEMNIFICATION, NEGLIGENCE, TORT (INCLUDING STRICT LIABILITY) OR OTHERWISE, IN EXCESS OF AN AMOUNT EQUAL TO THE NET CONTRACT VALUE OF THE PRODUCTS PROVIDED BY POWELL TO PURCHASER DURING THE MOST RECENTLY ENDED CALENDAR QUARTER.

POWELL VALVES

Established 1846

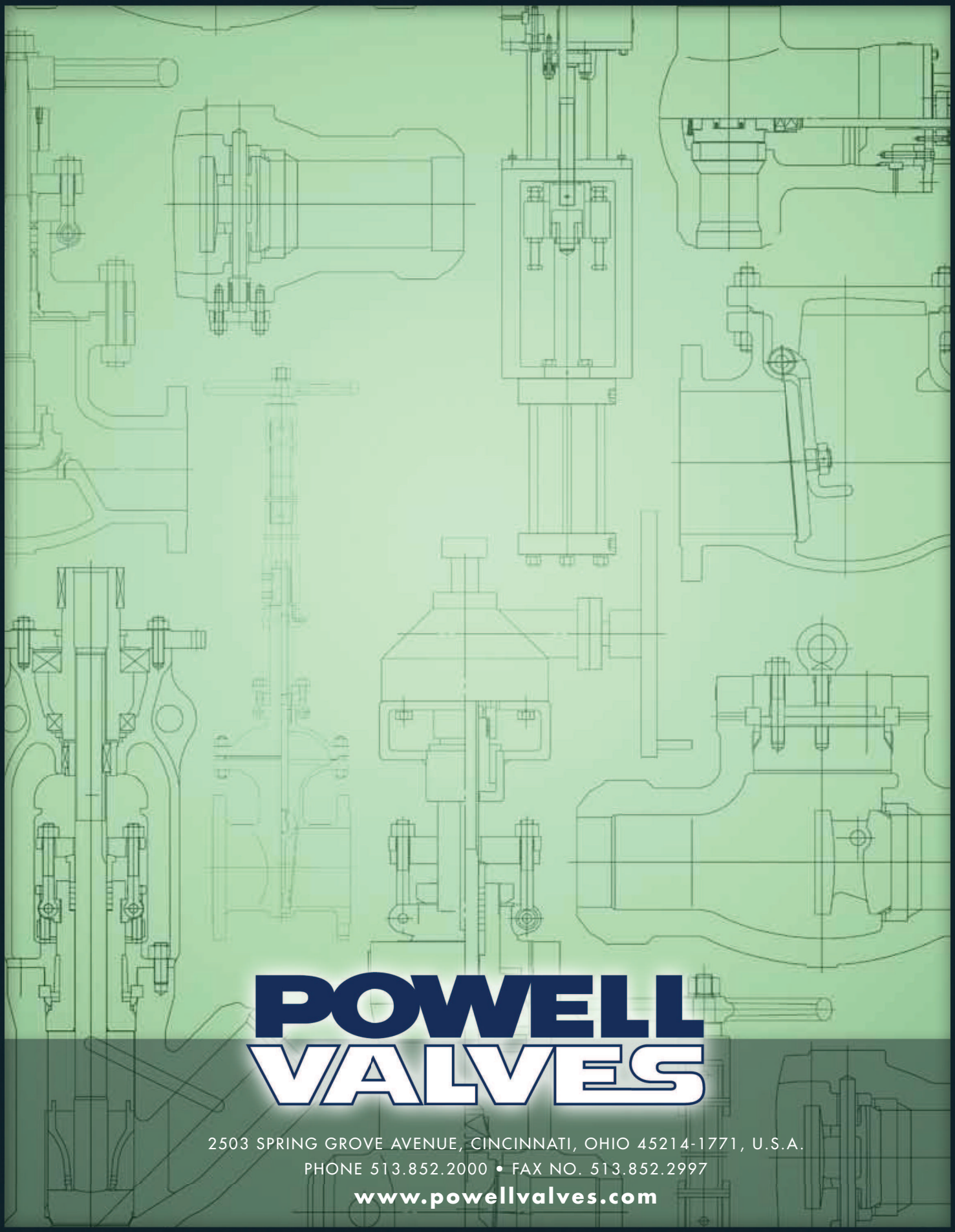

POWELL VALVES

2503 SPRING GROVE AVENUE, CINCINNATI, OHIO 45214-1771, U.S.A.
PHONE 513.852.2000 • FAX NO. 513.852.2997
www.powellvalves.com